Drafts are susceptible to change in the event typos are found prior to release

IPEL-PB80F-ADW1

Dual Lens 2x4 MP Panoramic Mini Bullet Network Camera

- Dual 4MP 1/2.7" CMOS image sensor, outputs 180° wide angle spliced image
- H.265+ & H.265 triple-stream encoding
- Max 8MP (4096 × 1860) @20 fps
- Active Deterrence: Built-in Siren, Red & Blue LEDs
- Built-in Mic and 2-Way Talk
- IMD 2.0, Perimeter Protection, ePTZ Tracking
- Dual Illumination: Max IR Length 82 feet, Max White LED Length 65ft
- 256B Micro SD memory, IP67, PoE

System Overview

IC Realtime's unique IPEL-PB80F-ADW1 utilizes dual 4MP starlight sensors spliced together to create a panoramic, 8MP (4096 × 1860) 180° overview, allowing the camera to replace multiple single-sensor cameras at a lower overall cost. Furthermore, the camera supports dual illumination with 82 feet of IR distance or 65 feet of white light illumination.

This camera also supports a suite of AI features with Human/Vehicle recognition, including Intelligent Motion Detect 2.0 and Perimeter Protection (Tripwire and Intrusion). The AI can be linked with Active Deterrence so that the built-in Red and Blue warning lights and speakers work to deter unwanted personnel from the area. Ideal applications for this camera include parking lots, schools, resorts and hotels.

Functions

Panoramic Splicing
IC Realtime's Panoramic Splicing technology splices multiple camera images and deletes overlapped areas to create a complete panoramic image. After splicing, a dual-sensor camera results in a single 180° field of view,

iMD 2.0 (Intelligent Motion Detect)
Based on the encoded detection skills of iMD 2.0, Object Search is IC Realtime's easy to use video clip search tool. You can review recordings to select people or objects you want searched for. Once defined, Object Search reviews video recordings from every iMD 2.0 equipped camera on the system and matches up detections that match your selection, then shows you those timelined clips.

Smart H.265+
Deliver high quality video without straining the network, Smart H.265+ is the optimized implementation of H.265. The Smart H.265+ encoding technology includes a scene adaptive encoding strategy, dynamic GOP, dynamic ROI, flexible multi-frame reference structure and intelligent noise reduction, providing saving of up to 70% of bandwidth and storage when compared with standard H.265.

Intelligent Video System (IVS)
With built-in intelligent video analytics, the camera has the ability to detect and analyze moving objects for improved video surveillance. The camera provides optional standard intelligence at the edge allowing detection of multiple object behaviors such as abandoned or missing objects. IVS also supports Tripwire analytics, allowing the camera to detect when a predetermined line has been crossed, ideal for business intelligence, workforce optimization, and actionable intelligence.

Smart IR
With IR illumination, detailed images can be captured in low light or total darkness. The camera's Smart IR technology adjusts the intensity of camera's infrared LEDs to compensate the distance of an object. Smart IR technology prevents IR LEDs from whitening out images as they come closer to the camera. The camera's integrated infrared illumination provides high performance in extreme low-light environments up to 82ft (25m).

Protection (IP67, wide voltage)
Subjected and certified to rigorous dust and water immersion tests, the IP67 rating makes it suitable for demanding outdoor applications. For environments with rain, sleet, snow and fog, an integrated wiper provides users with clear visibility at all times.Wide voltage: The camera allows ±30% input voltage tolerance (wide voltage range), and it is widely applied to outdoor environment with unstable voltage.

ADW 2.0
IC Realtime's 24/7 Color cameras With Active deterrence use 2 LED sets, a warm white illuminator to stream in color, then upon iMD detection, Active Deterrence stepping in with flashing red & blue LED light and audio warnings. ADW 2.0 cameras add a 3rd invisible & silent IR in standby mode to replace the 24/7 Color camera's always on warm white illuminator. With ADW2, a human or vehicle detection lights the white floodlight, and full Active Deterrence triggers only when the camera's tripline or defined trigger zone is violated.

Technical Specification

Camera

Image Sensor	Dual 1/2.7" CMOS
Effective Pixels	4096 (H) × 1860 (V)
RAM/ROM	1GB/ 128MB
Scanning System	Progressive
Electronic Shutter Speed	Auto/Manual 1/3 s–1/100,000 s
Minimum. Illumination	0.005 lux@F1.4 (Color, 30 IRE) 0.0005 lux@F1.4 (B/W, 30 IRE) 0 lux (Illuminator on)
S/N Ratio	>56dB
IR Distance	Distance up to 82ft (25m)
White Light Distance	Distance up to 65ft (20m)
Illumination Control	IR, Warm Light, Smart Illumination, Scheduled
IR LEDs	2
White Light LEDs	2

Lens

Lens Type	Fixed			
Mount Type	M12			
Focal Length	2.8mm			
Max. Aperture	F1.4			
Angle of View	Horizontal: 180°; Vertical: 86°			
Focus Control	Fixed			
Close Focus Distance	2.62 ft (0.8 m)			
DORI Distance	Detect	Observe	Recognize	Identify
	166ft	66ft	33ft	16ft

Pan/Tilt/Rotation

Pan/Tilt/Rotation Range	Pan: 0°–360°, Tilt: 0°–77°, Rotation: 0°–360°

Video

Compression	H.265; H.264; H.264H; H.264B; MJPEG (only supported by the sub stream)
AI Coding	AI H.265; AI H.264
Smart Codec	Smart H.265+; Smart H.264+
Streaming Capability	3 Streams
Resolution	4096 × 1860; 3632 × 1632; 3040 × 1368; 1200 × 530; 1920 × 860; 960 × 432
Frame Rate	Main Stream: 4096 × 1860@(1–20 fps)
	Sub stream: 1200 × 530@(1–20 fps)
	Third stream: 1920 × 860@(1–20 fps)
Bit Rate Control	CBR/VBR
Bit Rate	H.264: 6 kbps –16384 kbps H.265: 6 kbps –16384 kbps
Day/Night	Auto(ICR) / Color / B/W
Backlight Settings	BLC / HLC / WDR
White Balance	Auto/natural/street lamp/outdoor/manual/regional custom
Gain Control	Auto
Noise Reduction	3D DNR
WDR	120dB
Motion Detection	Off / On (4 Zone, Rectangle)
Region of Interest	Off / On (4 Zone)
Scene Self-adaptation (SSA)	Supported
Defog	Yes
Mirror	Off / On
Privacy Masking	Off / On (4 Area, Rectangle)

Audio

Compression	G.711a; G.711Mu; PCM; G.726; G.723

Network

Ethernet	RJ-45 (10/100Base-T)
Protocol	IPv4; IPv6; HTTP; TCP; UDP; ARP; RTP; RTSP; RTCP; RTMP; SMTP; FTP; SFTP; DHCP; DNS; DDNS; QoS; UPnP; NTP; Multicast; ICMP; IGMP; NFS; SAMBA; PPPoE; SNMP; P2P
Cyber Security	Video encryption; Firmware encryption; Configuration encryption; Digest; WSSE; Account lockout; Security logs; IP/MAC filtering; Generation and importing of X.509 certification; syslog; HTTPS; 802.1x; Trusted boot; Trusted execution; Trusted upgrade
Interoperability	ONVIF (Profile S/Profile G/Profile T); CGI
Streaming Method	Unicast / Multicast
Max. User Access	20 (Total bandwidth: 80 M)
Edge Storage	FTP; SFTP; Micro SD card (support max. 256 GB); NAS
Web Viewer	IE, Chrome, Firefox, Safari
Management Software	SmartICRSS, DSS
Smart Phone	IOS, Android

Certifications

Certifications	FCC Part 15, Subpart B

Interface

Audio Interface	Built-in dual Mic and Speaker
	1/1 channel In/ Out (RCA port)
Alarm	1 channel in: wet contact, 5 mA 3 V–5 VDC 1 channel out: wet contact, 300 mA 12 VDC

Electrical

Power Supply	12 VDC (±30%); PoE (802.3af)
Power Consumption	Basic: 3.4 W (12 VDC); 3.8 W (PoE) Max. (H.265+WDR+ warm light+siren and light active deterrence + intelligence on): 9 W (12 VDC); 10.3 W (PoE)

Environmental

Operating Conditions	-40° F ~ +140° F (-40° C ~ +60° C) / Less than 95% RH
Storage Conditions	-40° F ~ +140° F (-40° C ~ +60° C) / Less than 95% RH
Ingress Protection	IP67

Construction

Casing	Metal + Plastic
Dimensions	7.20" × 3.90" × 3.07" (183.1 mm × 99.0 mm × 78.0 mm)
Net Weight	1.53 lb (695 kg)
Gross Weight	1.92 lb (870 g)

AI Functions

IVS

Basic IVS	Tripwire; Intrusion

Perimeter Protection

Capabilities	Tripwire; Intrusion (Supports the classification and detection of vehicle and human objects)

Intelligent Motion Detect 2.0

Capabilities	Advanced secondary filtering for human and motor vehicle , reducing false alarms caused by leaves, rain and lighting condition changes. Supports Object Search with compatible NVRs.

AI Search

Capabilities	Works together with AI enabled NVRs to perform refined intelligent search, event extraction and merging to event videos

DRAFT

Accessories

Included Mount

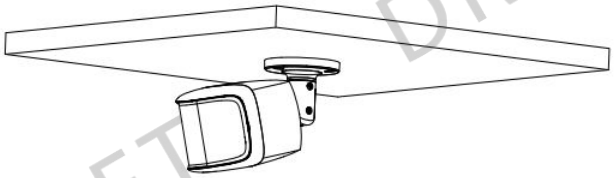

MNT-JUNCTIONBOX-1

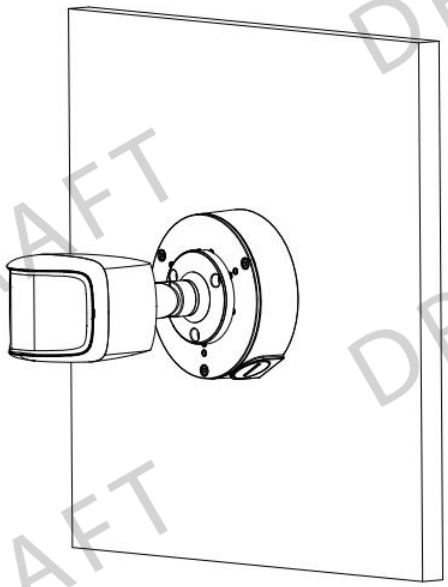

Dimensions (mm/in)

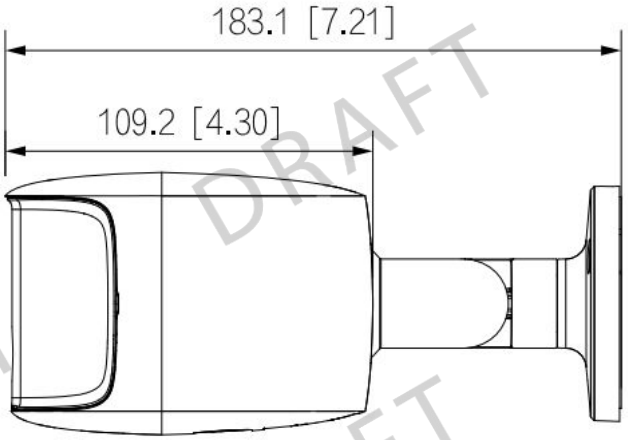

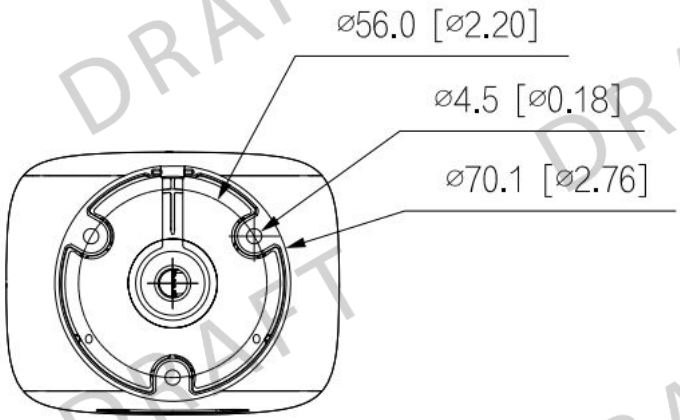

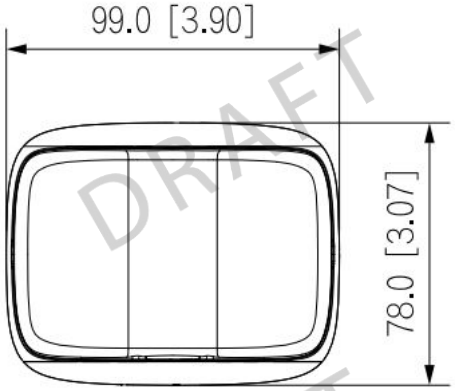

DRAFT