IPD-80A

2MP IR Eyeball Network Camera

- 1/2.7” 2 Megapixel progressive CMOS
- 25/30fps@1080P(1920×1080)
- H.265 & H.264 dual-stream encoding
- DWDR, Day/Night(ICR), 3DNR, AWB, AGC, BLC
- 2.8 mm fixed lens
- Max. IR LEDs length 30m
- IP67, PoE

System Overview

Clearview’s IPD-80A is a 2MP Eyeball style camera with a 1/2.7” progressive scan CMOS capable of 1080P at 25/30fps and equipped with a 2.8 mm fixed lens. Other features include IVS support with Tripwire and Intrusion, dual stream H.265 compression for optimized storage, Max 98ft IR distance and IP67 protection .

The camera's elegant blend of aesthetics combined with a range of easy mounting solutions provides an excellent choice for a variety of small to mid-size applications at an affordable price.

Functions

Interoperability
The camera conforms to the ONVIF (Open Network Video Interface Forum) specifications, ensuring interoperability between network video products regardless of manufacturer.

Protection (IP67, wide voltage)
Subjected and certified to rigorous dust and water immersion tests, the IP67 rating makes it suitable for demanding outdoor applications. For environments with rain, sleet, snow and fog, an integrated wiper provides users with clear visibility at all times. Wide voltage: The camera allows ±30% input voltage tolerance (wide voltage range), and it is widely applied to outdoor environment with unstable voltage.

Environmental
Cameras operate in extreme temperature environments, rated for use in temperatures from -10° C to +50° C (14° F to +122° F) with 95% humidity.

Smart H.265+
Smart H.265+ is the optimized implementation of the H.265 codec that uses a scene-adaptive encoding strategy, dynamic GOP, dynamic ROI, flexible multi-frame reference structure and intelligent noise reduction to deliver high-quality video without straining the network. Smart H.265+ technology reduces bit rate and storage requirements by up to 70% when compared to standard H.265 video compression

Intelligent Video Analysis (IVS)
With built-in intelligent video analytics, the camera has the ability to detect and analyze moving objects for improved video surveillance. The camera provides optional standard intelligence at the edge allowing detection of multiple object behaviors such as Tripwire analytics, allowing the camera to detect when a predetermined line has been crossed, ideal for business intelligence, workforce optimization, and actionable intelligence.

Technical Specification

Camera

Image Sensor	1/2.7" 2 Megapixel progressive CMOS
Effective Pixels	1920(H) x 1080(V)
RAM/ROM	256MB/32MB
Scanning System	Progressive
Electronic Shutter Speed	Auto/Manual, 1/3~1/100000s
Minimum Illumination	0.08Lux/F2.0(Color,1/3s,30IRE) 0.3Lux/F2.0(Color,1/30s,30IRE) 0Lux/F2.0(IR on)
S/N Ratio	More than 50dB
IR Distance	Distance up to 30m(98ft)
IR On/Off Control	Auto / Manual
IR LEDs	12

Lens

Lens Type		Fixed			
Mount Type		Board-in			
Focal Length		2.8mm			
Max. Aperture		F2.0			
Angle of View		H:104°,V:55°			
Focus Control		Fixed			
Close Focus Distance		0.6m			
DORI Distance	Lens	Detect	Observe	Recognize	Identify
	2.8mm	131 ft	52 ft	26 ft	13 ft

Pan/Tilt/Rotation

Pan/Tilt/Rotation Range	Pan:0˚~360˚; Tilt:0˚~90˚; Rotation:0˚~360˚

Intelligence

IVS	Tripwire, Intrusion

Video

Compression	H.265/H.264H/MJPEG(Sub Stream)
Streaming Capability	2 Streams
Resolution	1080P(1920x1080)/1.3M(1280x960)/720P(1280×720)/D1(704×576/704×480)/VGA(640×480)/CIF(352×288/352×240)
Frame Rate	Main Stream: 1080P(1 ~ 25/30fps) Sub Stream: D1(1 ~ 25/30fps)
Bit Rate Control	CBR/VBR
Bit Rate	H.265: 12K ~ 6400 Kbps H.264: 32K ~ 10240 Kbps
Day/Night	Auto(ICR) / Color / B/W
BLC Mode	BLC / HLC / DWDR
White Balance	Auto / Natural / Street Lamp / Outdoor / Manual
Gain Control	Auto / Manual
Noise Reduction	3D DNR
Motion Detection	Off / On (4 Zone, Rectangle)
Region of Interest	Off / On (4 Zone)
Electronic Image Stabilization (EIS)	N/A
Smart IR	Support
Defog	N/A
Digital Zoom	16x
Flip	0°/90°/180°/270°
Mirror	Off / On
Privacy Masking	Off / On (4 Area, Rectangle)

Audio

Compression	N/A

Network

Ethernet	RJ-45 (10/100Base-T)
Protocol	HTTP;HTTPs;TCP;ARP;RTSP;RTP;RTCP;UDP;SMTP;FTP;DHCP;DNS;DDNS;PPPoE;IPv4/v6;QoS;UPnP;NTP;Bonjour;IEEE 802.1x;Multicast;ICMP;IGMP;TLS
Interoperability	ONVIF Profile S&G, API
Streaming Method	Unicast / Multicast
Max. User Access	10 Users /20 Users
Edge Storage	NAS Local PC for instant recording
Web Viewer	IE, Chrome, Firefox, Safari
Management Software	SmartICRSS, DSS
Smart Phone	IOS, Android

Certifications

Certifications	CE (EN 60950:2000) UL:UL60950-1 FCC: FCC Part 15 Subpart B

Interface

Video Interface	N/A
Audio Interface	N/A
RS485	N/A
Alarm	N/A

Electrical

Power Supply	DC12V, PoE (802.3af)(Class 0)
Power Consumption	<5.5W

Environmental

Operating Conditions	-30° C ~ +60° C (-22° F ~ +140° F) / Less than 95% RH
Storage Conditions	-30° C ~ +60° C (-22° F ~ +140° F) / Less than 95% RH
Ingress Protection	IP67
Vandal Resistance	N/A

Construction

Casing	Metal+Plastic
Dimensions	108mm×84.9mm(4.25"x3.15")
Net Weight	0.23Kg(0.51lb)
Gross Weight	0.387Kg(0.85lb)

Accessories

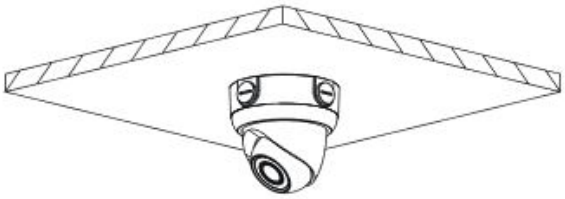

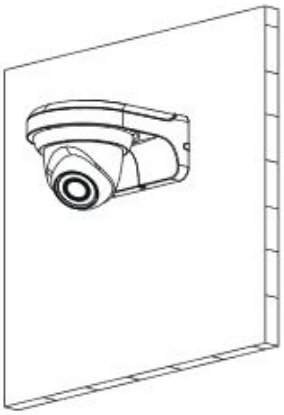

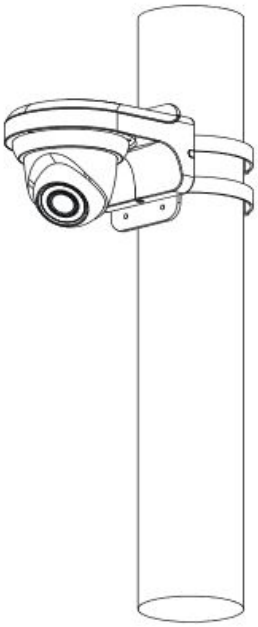
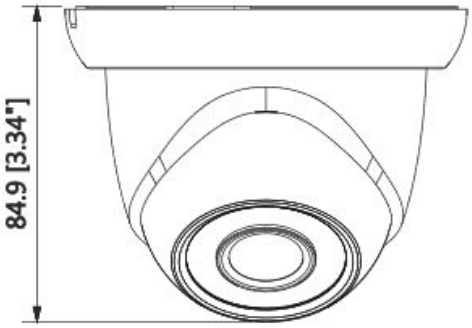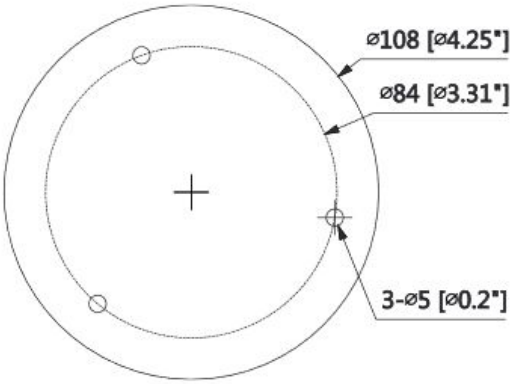
Dimensions (mm/in)