Intelligent Speed Dome Installation Manual

Version 1.1.2

Table of Contents

1 INSTALLATION PREPARATION 1

1.1 Basic Requirements 1

1.2 Safety Check 1

1.3 Cable Requirements 1

1.3.1 Video Cable Requirements 1
1.3.2 Power Supply Cable Requirements 1

2 SPEED DOME INSTALLATION 3

2.1 Check Accessories 3

2.2 Open Device 3

2.3 Initial Setup 3

2.4 DIP Switch Setup 4

2.4.1 DIP Switch Location and Function 4
2.4.2 DIP Switch Setup 5
2.4.3 Address Setup 5
2.4.4 Baud Rate and Parity Setup 5
2.4.5 Terminal Matching Resistance Setup 6

2.5 Reset and SD Card Installation (Network Speed Dome) 7

3 CEILING MOUNT 10

3.1 Installation Components 10

3.2 Installation Conditions 10

3.3 Installation Steps 10

4 WALL MOUNT 13

4.1 Mounting Component 13

4.2 Installation Conditions 13

4.3 Installation Steps 13

5 IN-CEILING MOUNT 16

5.1 Mounting Component 16

5.2 Installation Conditions 16

5.3 Installation Steps 16

6 APPENDIX I THUNDER PROOF AND SURGE PROTECTION (OUTDOORS) 19

6.1 Lightning Protection (Indoors) 19

7 APPENDIX II ABOUT RS485 BUS 21

7.1 RS485 Bus Main Feature 21

7.2 RS485 Bus Transmission Distance 21

7.3 The Problem in Practical Use 21

7.4 RS485 Bus FAQ 22

8 APPENDIX III THE 24V AC WIRE DIAMETER AND TRANSMISSION DISTANCE RELATION TABLE 23

9 APPENDIX IV12V AC WIRE GAUGE AND TRANSMISSION DISTANCE RELATION TABLE 24

10 APPENDIX V WIRE GAUGE REFERENCE TABLE 26

Welcome

Thank you for purchasing our speed dome!

Please read the following safeguards and warnings carefully before you install or use the product!

Important Safeguards and Warnings

1. Qualified Engineer Needed

- The installation engineer or maintenance engineer shall have corresponding CCTV system installation certificate or maintenance qualification certificate.
- The installation engineer or maintenance engineer shall have qualification certificate for work at height.
- The installation engineer or maintenance engineer shall have the basic knowledge and operation technique for low-voltage cable layout and low-voltage electronic cable connection.
- Please read the installation manual carefully and keep it well for future reference,
- We are not liable for any problems caused by unauthorized modifications or attempted repair.

2. Lifting Appliance Requirement

- Please select the proper speed dome installation mode and use the lifting appliances at the safety environment.
- The lifting appliances shall have the enough capacity to reach the installation height.
- The lifting appliances shall have safe performance.

The precaution measures include two types: Warning and Note.

- **Warning**: It is to alert you there is an optional risk of death or series injury!
- **Note**: It is to alert you there is an optional risk of damage or property loss!

Warning

1. All installation and operation here should conform to your local electrical safety codes. We assume no liability or responsibility for all the fires or electrical shock caused by improper handling or installation.
2. Be sure to use all the accessories (such as power adapter) recommended by manufacturer.
3. Do not connect several speed domes to one power adapter. It may result in overheat or fire if it exceeds the rated load.
4. Before you connect the cable, install or uninstall, or begin the daily maintenance work, please turn off the power and unplug the power cable.
5. Please make sure the produce is secure firmly on the wall or the ceiling.
6. Please turn off the power and unplug the power cable, If there is any smoke, disgusting smell, or noise. Please contact your local retailer or customer service centre for help.
7. All the examination and repair work should be done by the qualified service engineers. We are not liable for any problems caused by unauthorized modifications or attempted repair.

Note

1. Safety Transportation

- Heavy stress, violent vibration or water splash are not allowed during transportation, storage and installation.
- This series product must use split type package during the transportation.
- We are not liable for any damage or problem resulting from the integrated package during the transportation.

2. When device is malfunction

Shut down the device and disconnect the power cable immediately if there is smoke, abnormal smell or abnormal function. Please contact your local retailer ASAP.

3. Do not try to dismantle or modify the device

- There is risk of personal injury or device damage resulting from opening the shell.
- Please contact your local retailer if there is internal setup or maintenance requirement.
- We are not liable for any problems caused by unauthorized modifications or attempted repair.

4. Do not allow other object falling into the device

- Please make sure there is no metal or inflammable, explosive substance in the speed dome.
- The above mentioned objects in the device may result in fire, short-circuit or damage.
- Please shut down the device and disconnect the power cable if there is water or liquid falling into the camera. Please contact your local retailer ASAP.
- Please pay attention to the camera. Avoid the sea water or rain to erode the camera.

5. Handle carefully

Do not allow this series product fall down to the ground.
Avoid heavy vibration.

6. Installation Environment Requirement

- This series speed dome should be installed in a cool, dry place away from direct sunlight, inflammable, explosive substances and etc.
- This series product shall be away from the strong electromagnetism radiant, please keep it away from wireless power, TV transmitter, transformer and etc.

7. Daily Maintenance

- Please use the soft cloth to clean dust on the shell, or you can use soft cloth with cleaning liquid to clean the shell and then use soft cloth to make it dry.
- Do not use gasoline, dope thinner or other chemical material to clean the shell. It may result in shell transfiguration or paint flake.

- Do not allow the plastic or rubber material to touch the shell for a long time. It may result in paint flake.

1 Installation Preparation

1.1 Basic Requirements

- All installation and operation here should conform to your local electrical safety codes, fire prevention laws and some related regulations.
- Check if all the components are included according to the packing list.
- Make sure if the application scene of the speed dome conforms to the installation requirements. Please contact your dealer if you have any questions.
- Please use the product according to the operating environment.

1.2 Safety Check

- Make sure the installation site has enough space to hold the product and its mounting components.
- Please make sure the ceiling or wall can sustain 8X weight of the speed dome and its mounting components.
- Please make sure the wall is thick enough to install expansion bolts (Users need to purchase separately).
- It needs to guarantee the installation height shall be more than 6m if it is the laser speed dome.

1.3 Cable Requirements

1.3.1 Video Cable Requirements

- 75 ohm.
- Full cable with copper conductor.
- 95% knitted copper shield.

- Please refer to Appendix II for RS485 communication cable information.

International Model	Max Transmission Distance (Ft\M)
RG59/U	750Ft (229M)
RG6/U	1,000Ft (305M)
RG11/U	1,500Ft (457M)

Note

The above can be applied to analog speed dome and network speed dome

International Mode	Max Transmission Distance (M\Ft)
SYV-75-3	720P（25fps\30fps）：500M/1640Ft
	720P（50fps\60fps）：300M/984Ft
	1080P（25fps\30fps）：300M/984Ft

Note

The above can be applied to HDAVS speed dome

1.3.2 Power Supply Cable Requirements

- Refer to “Appendix III Relationship Table Between AC 24V Wire Diameter and Transmission Distance” for AC 24V power supply device.

- Refer to “Appendix IV Relationship Table Between DC 12V Wire Diameter and Transmission Distance” for DC 12V power supply device.

2 Speed Dome Installation

2.1 Check Accessories

Before installation, please check the accessories one by one according to the packing list. Please make sure all the components listed are included.

2.2 Open Device

Note

This section is for analog speed dome, network speed dome and intelligent tracking speed dome.

Open the package and then take out the device. Remove the transparent cover and take out the packing material EPE around the speed dome module. Please remove the paster from the pedestal. See Figure 2-1.

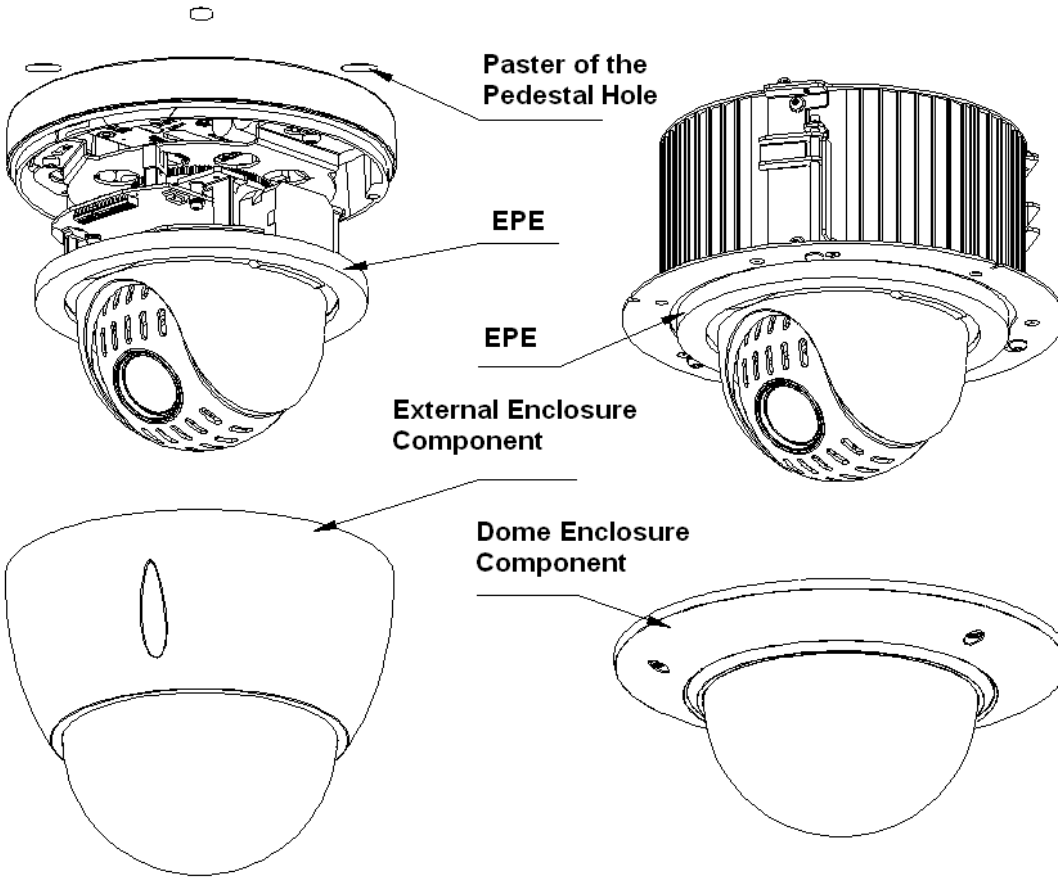

Figure 2-1

2.3 Initial Setup

- Address code: 1
- Baud rate: 9600
- Parity: None
- 120Ω matched resistance: OFF

2.4 DIP Switch Setup

2.4.1 DIP Switch Location and Function

The corresponding functions between analog speed dome and HDAVS speed dome are different, which will be separately introduced below.

2.4.1.1 Analog Speed Dome

It is to take ceiling mount speed dome for example. Open the transparent cover of the device and you can see there are two DIP switches on the PTZ, which are used to set speed dome address, baud rate and parity. The location of DIP switch is shown in Figure 2-2.

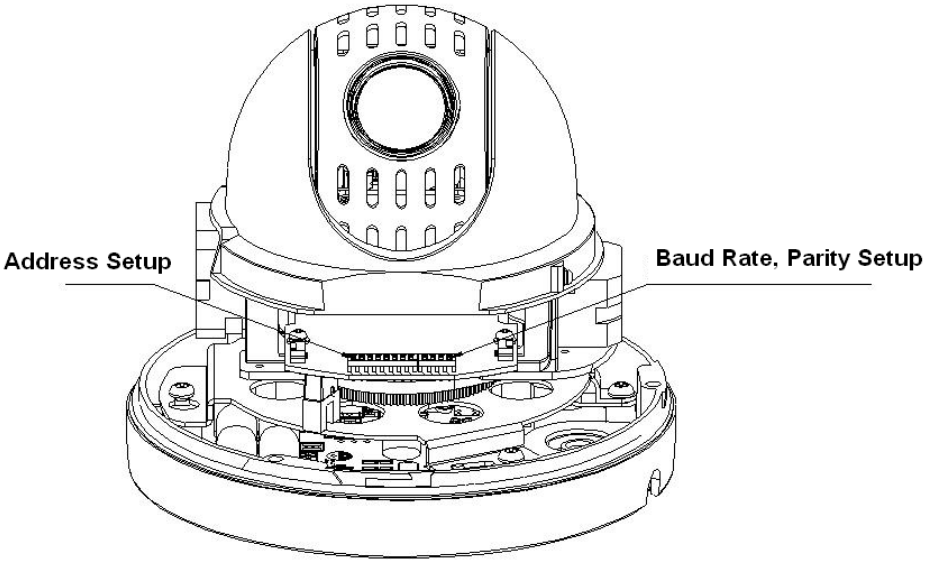

Figure 2-2

2.4.1.2 HDAVS Speed Dome

It is to take ceiling mount speed dome for example. Open the transparent cover of the device and you can see there are two DIP switches on the PTZ, which are used to set speed dome address, baud rate. The location of DIP switch is shown in Figure 2-3.

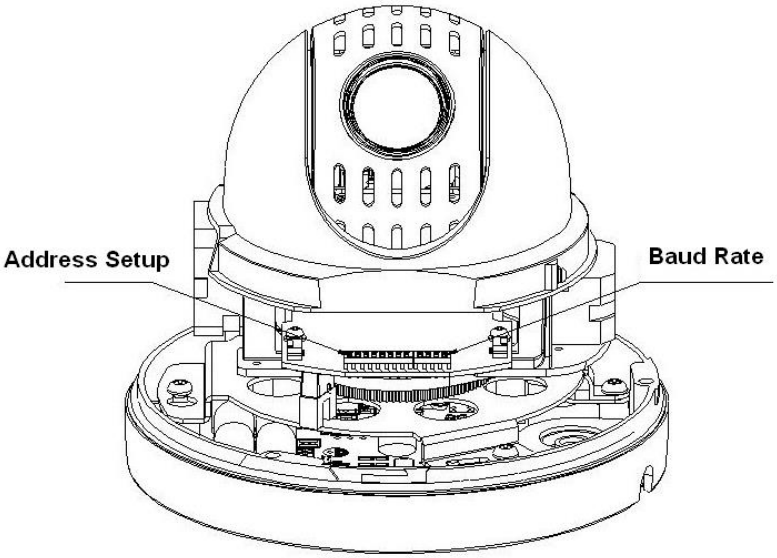

Figure 2-3

2.4.2 DIP Switch Setup

It has to set address number and baud rate before controlling the speed dome, the speed dome will respond to those control commands after these settings are completed.

Note

- For wall-mounted speed dome, it has to install back the transparent dome cover component after taking out EPE and set DIP switch well.
- It has to cut off the power and restart the device after related information has been reset, which is to make new settings valid.

There are two DIP switches on the PTZ which are used to confirm the parameters of speed dome address, baud rate and parity. When the switch is moved to ON as 1, then 1 is the lowest bit and 8 is the highest bit for the address DIP setting; 1 is the lowest bit and 4 is the highest bit for the baud rate and parity DIP setting.

Note

The intelligent speed dome can self-adapt to PELCO-D, PELCO-P and industrial standard protocol, control protocol doesn't need to be set via DIP switch.

2.4.3 Address Setup

The speed dome can use DIP switch to set address number, coding mode adopts binary coding. 1~8 bits are valid bit, the highest address bit is 255, the address label is shown in Figure 2-1, please refer to Figure 2-1 for the address bit setup.

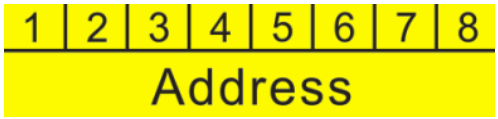

Figure 2-1

Address	1	2	3	4	5	6	7	8
1	OFF	OFF	OFF	OFF	OFF	OFF	OFF	OFF
1	ON	OFF	OFF	OFF	OFF	OFF	OFF	OFF
2	OFF	ON	OFF	OFF	OFF	OFF	OFF	OFF
3	ON	ON	OFF	OFF	OFF	OFF	OFF	OFF
4	OFF	OFF	ON	OFF	OFF	OFF	OFF	OFF
5	ON	OFF	ON	OFF	OFF	OFF	OFF	OFF
6	OFF	ON	ON	OFF	OFF	OFF	OFF	OFF
7	ON	ON	ON	OFF	OFF	OFF	OFF	OFF
8	OFF	OFF	OFF	ON	OFF	OFF	OFF	OFF
……	……							
254	OFF	ON	ON	ON	ON	ON	ON	ON
255	ON	ON	ON	ON	ON	ON	ON	ON

Table 2-1

2.4.4 Baud Rate and Parity Setup

The functions which need to be set between analog speed dome and HDAVS speed dome, which will be introduced separately.

2.4.4.1 Analog Speed Dome

It is to set parity and baud rate of the speed dome. 1 and 2 bit is the baud rate setting bit while 3 and 4 bit is the parity setting bit. Please refer to Figure 2-2 for the label, refer to Table 2-2 and Table 2-3 for settings.

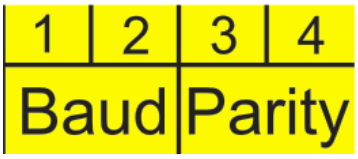

Figure 2-2

1	2	Baud Rate
OFF	OFF	9600bps
ON	OFF	4800bps
OFF	ON	2400bps
ON	ON	1200bps

Table 2-2

3	4	Parity
OFF	OFF	NONE
ON	OFF	EVEN
OFF	ON	ODD
ON	ON	NONE

Table 2-3

2.4.4.2 HDAVS Speed Dome

It is to set baud rate of the speed dome. Bit 1 and 2 is baud rate setting bit. Refer to Figure 2-3 for the label and refer to Table 2-4 for the setting.

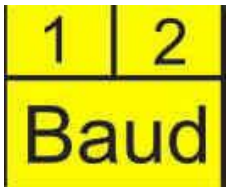

Figure 2-3

1	2	Baud Rate
OFF	OFF	9600bps
ON	OFF	4800bps
OFF	ON	2400bps
ON	ON	1200bps

Table 2-4

2.4.5 Terminal Matching Resistance Setup

It is the connection mode of device terminal 120Ω resistance, terminal resistance 120Ω is already equipped on the power panel, there are two connection modes, which is shown in Figure 2-4.

	1~2	2~3
120Ω	ON	OFF

Figure 2-4

Refer to Figure 2-5 for the default connection mode, at this moment, the jumper cap on the power board is connected to the location 2~3 of the socket and 120Ω resistance hasn't been connected yet.

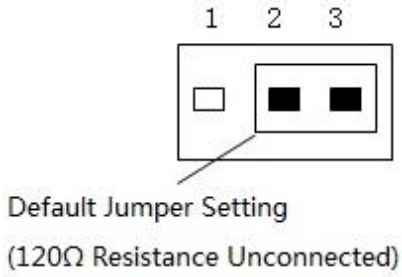

Figure 2-5

It needs to plug out the jumper cap from 2~3 location when it needs to connect to 120Ω resistance, and then connect to the location of 1~2. In this case, 120Ω resistance is connected to the circuit, which is shown in Figure 2-6.

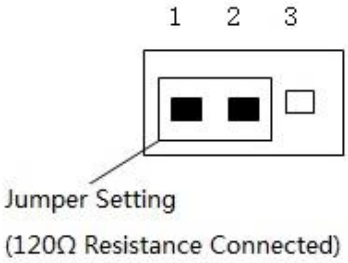

Figure 2-6

2.5 Reset and SD Card Installation (Network Speed Dome)

You can see that the reset button is located on the PTZ mainboard (shown in Figure 2-7 and Figure 2-8) after opening the device. The reset button is used for network system reset.

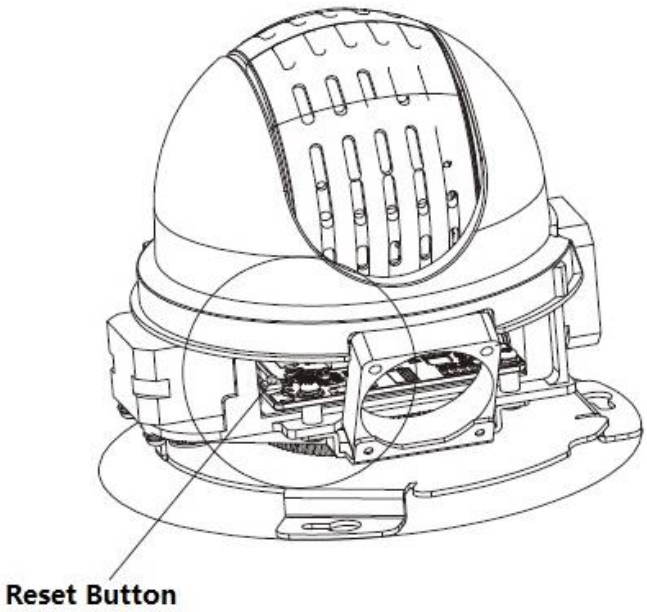

Figure 2-7

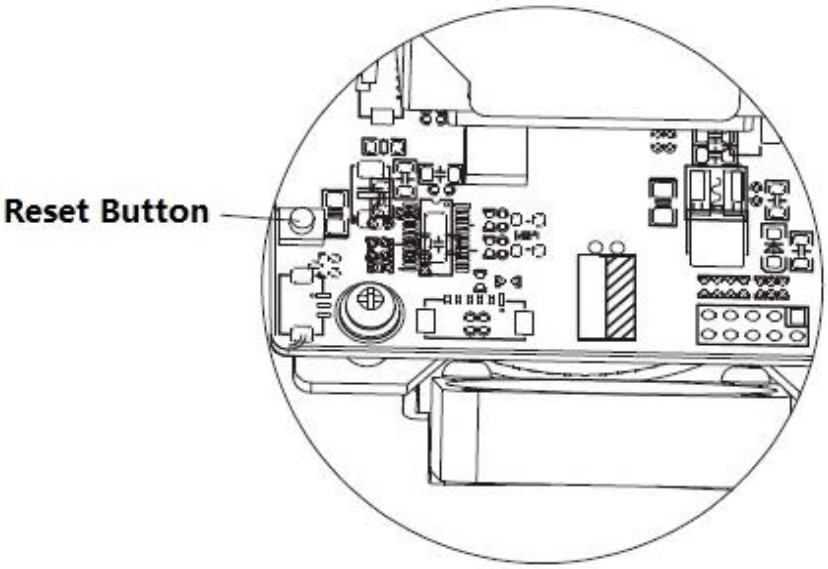

Figure 2-8

The SD card of speed dome has to be installed on the camera module, which is shown in Figure 2-9. It is used for data storage.

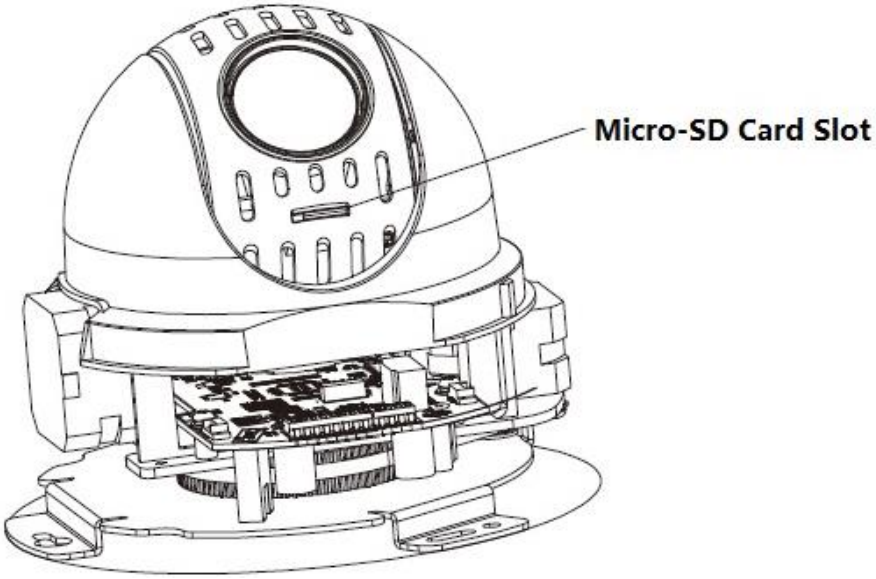

Figure 2-9

Note

Please contact our technical support if you have any confusion.

3 Ceiling Mount

3.1 Installation Components

The ceiling mount installation component is shown as in Figure 3-1.

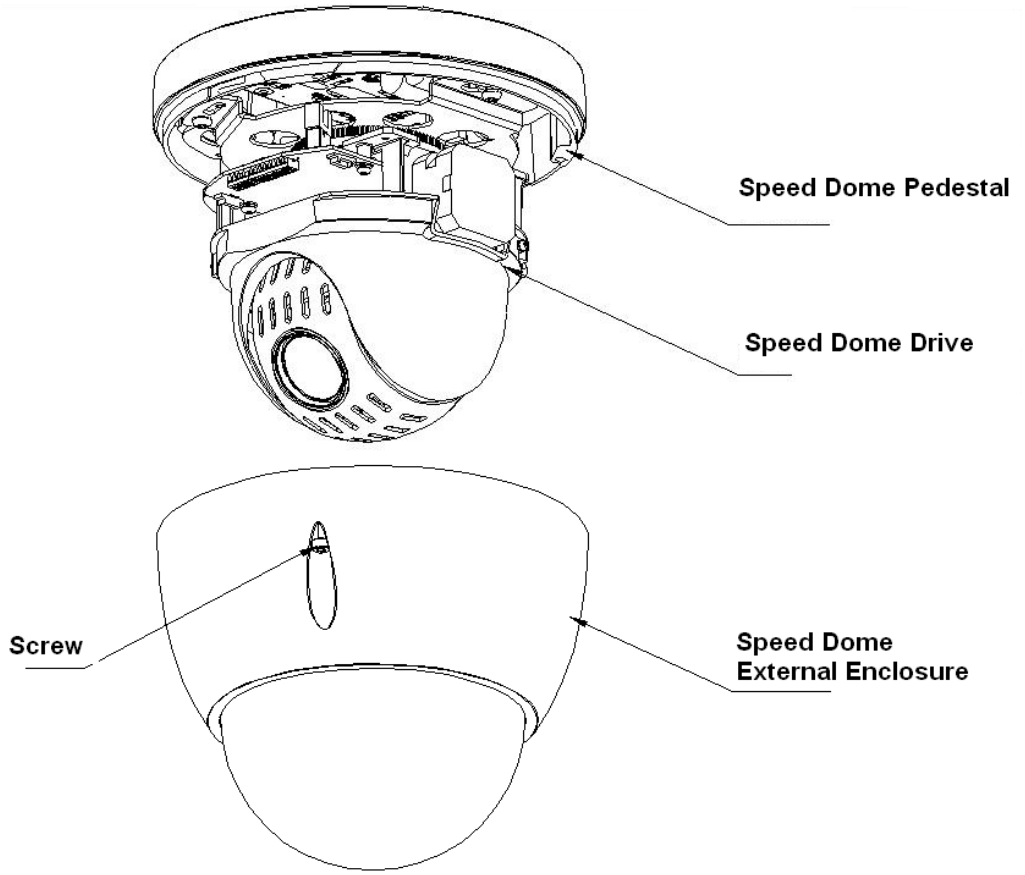

Figure 3-1

3.2 Installation Conditions

The ceiling-mounted speed dome can be installed in the hard construction wall in the indoor environments. Before the installation, please make sure:

- The wall is thick enough to install the expansion bolt.
- The ceiling can sustain at least 8x weight of the speed dome.

3.3 Installation Steps

There are two methods of cable outlet for ceiling mount:

- Do not dig holes on the ceiling; pull the cable through side cable exit of the speed dome.
- Dig holes on the ceiling; pull the cable through inside the ceiling.

Step 1

Confirm mounting position and cable outlet mode. Use the ceiling installation position map to dig holes on the ceiling and then put the four plastic expansion bolts into the holes you just dug.

Step 2

As it is shown in Figure 3-2, place the cable well according to the cable outlet mode. Connect the corresponding power, video output, RS-485 control cable, alarm input and output port (according to requirement), and then use insulated rubber tape to twine the cable connector well to make it waterproof.

Note

- The video port is covered with heat-shrinkable tube with high shrinkage ratio, it needs to heat and shrink the tubes on both sides after the video port is well connected, which is to make sure the video port is moistureproof and waterproof.
- The step can be applied to ceiling-mounted, wall-mounted and in-ceiling speed dome.

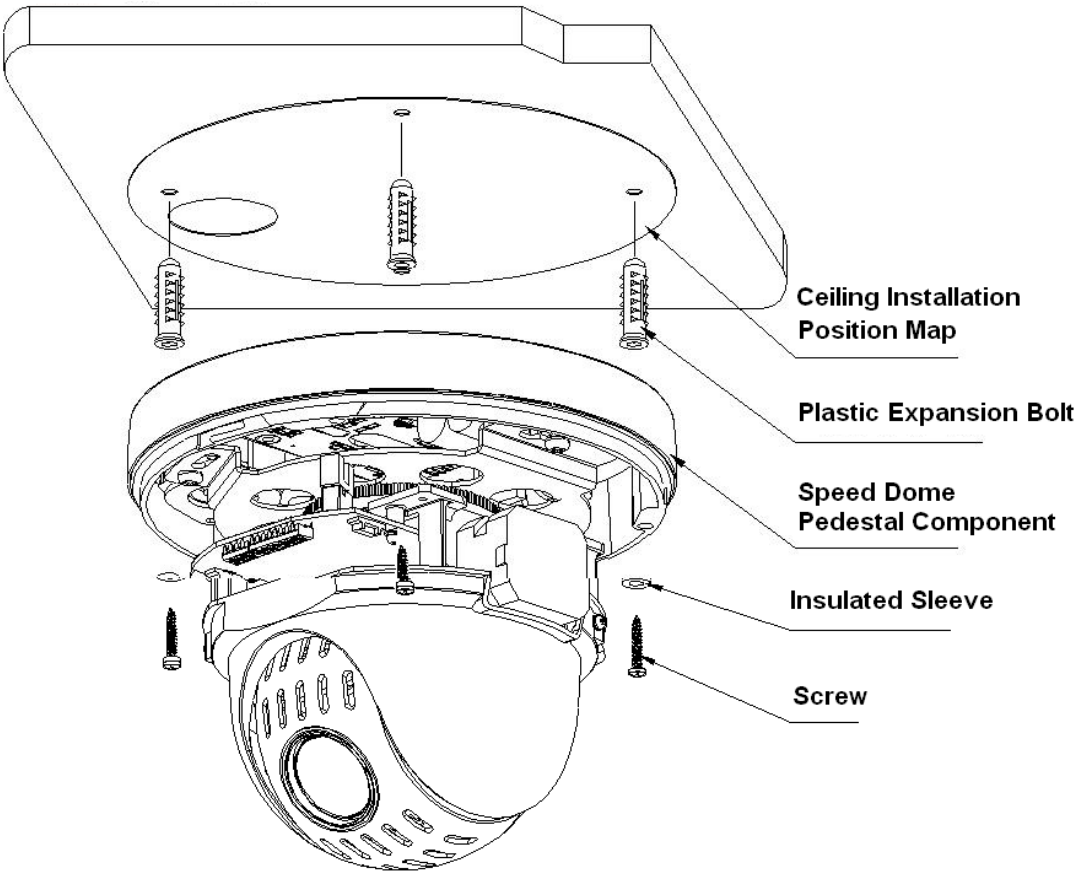

Figure 3-2

Step 3

Use four screws together with insulated cover to fix the ceiling-mounted speed dome pedestal component onto the ceiling, screws shall be twisted into the expansion bolts which have been set.

Step 4

AS it is shown in Figure 3-3, line up the arrow symbol on the speed dome external enclosure to the bar symbol of the pedestal. Use three screws (provided) to secure the external enclosure on the pedestal and fix firmly.

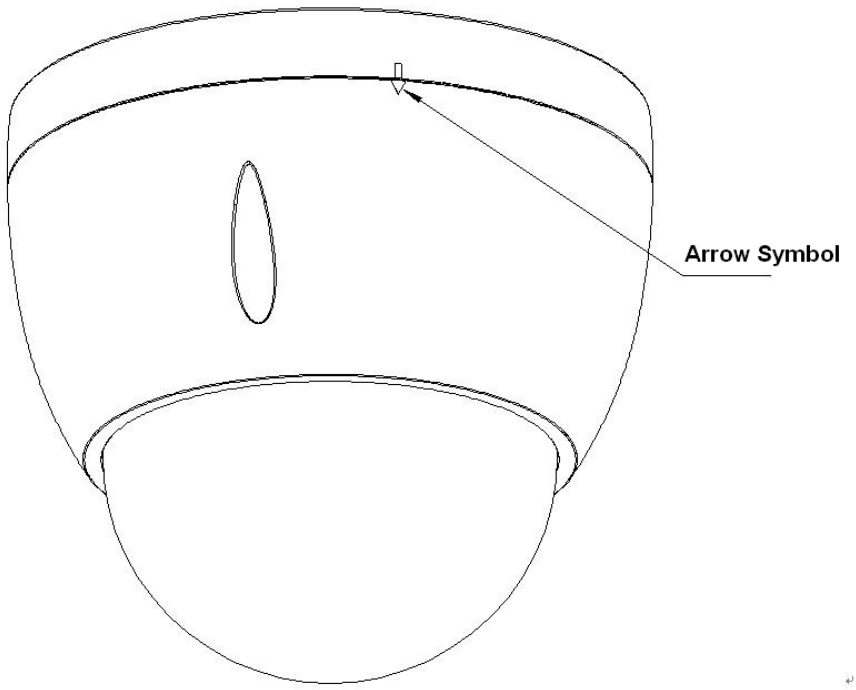

Figure 3-3

4 Wall Mount

4.1 Mounting Component

The wall-mounted bracket and outdoor speed dome is shown as in Figure 4-1.

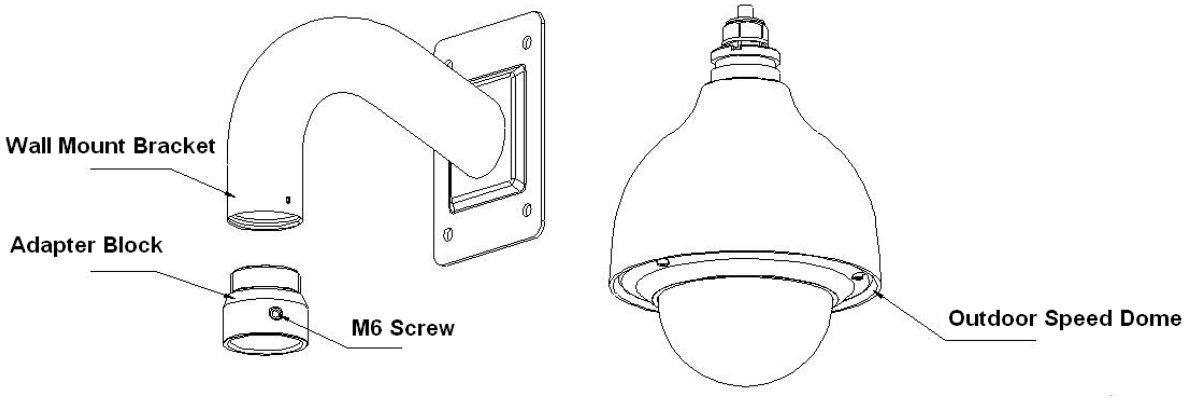

Figure 4-1

4.2 Installation Conditions

The wall-mounted speed dome can be installed in the hard construction wall in both indoor and outdoor environments. Before the installation, please make sure:

- The wall is thick enough to install the expansion bolt.
- The wall can sustain at least 8X weight of the speed dome and bracket.

4.3 Installation Steps

Step 1

Dig a hole of 50mm diameter for cable exit in the mounting wall where the speed dome will be installed.

Step 2

As it is shown in Figure 4-1, twist the adapter block into the internal thread of the wall-mounted bracket, until it reaches the end and then fix the set screw firmly.

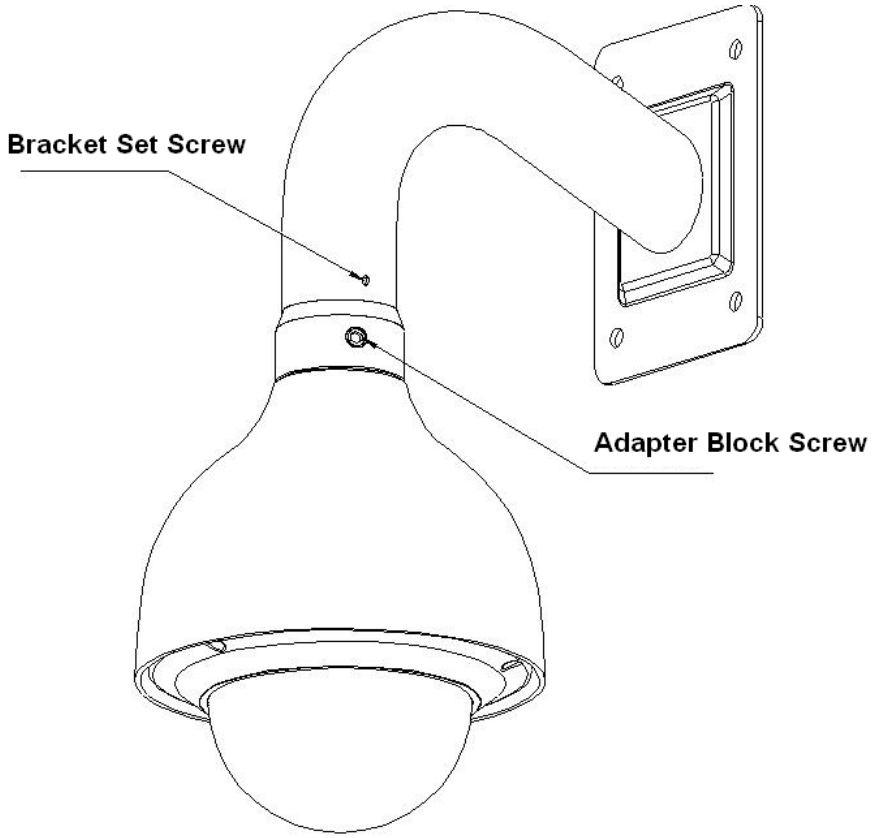

Figure 4-1

Step 3

Pull the composite cable through the adapter block and pull it out of the other end of the wall-mounted bracket. Line up the tab on the top of the external enclosure to the internal hole of the adapter block and then push it to the end, and then tighten three screws of the adapter block firmly. Please note this step is very important. Please make sure the screws are firm, otherwise, it may result in falling risk of the intelligent speed dome.

Step 4

Take the mounting hole on the bottom of wall-mounted bracket (align the bracket cable outlet hole with the circular hole on the wall), draw the punching position on the wall and dig holes, then bury the expansion bolts into the holes you just dug.

Step 5

Connect the composition cable and then pull it through the hole in the wall. Use four hex screws and flat washer to fix the wall-mounted bracket on the wall where the expansion bolts have been inserted. Refer to Figure 4-2 for more details. So far, the speed dome installation has been completed, which is shown in Figure 4-3.

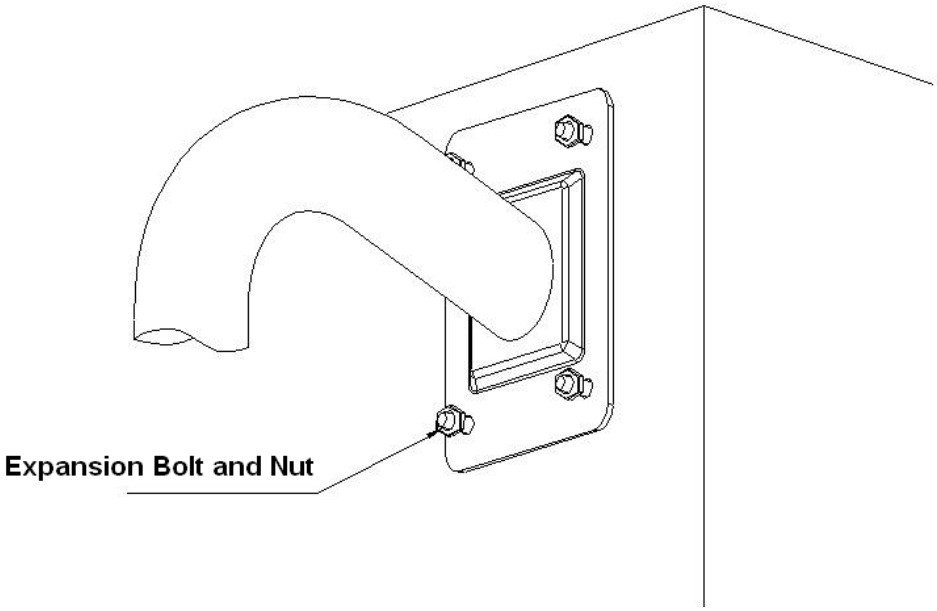

Figure 4-2

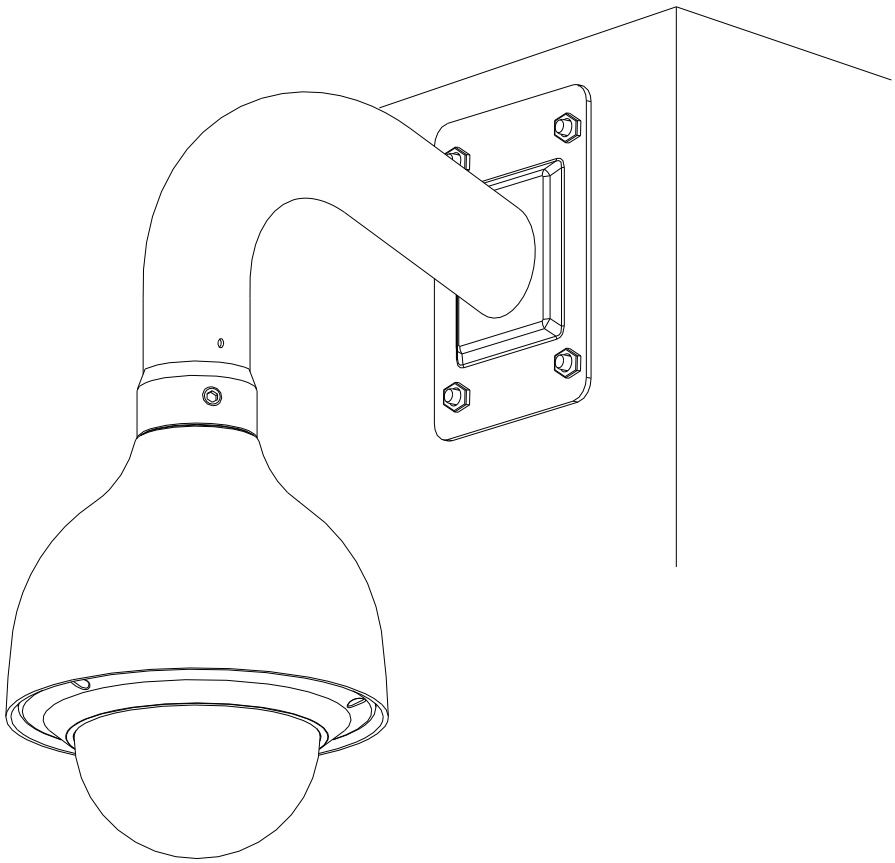

Figure 4-3

5 In-ceiling Mount

5.1 Mounting Component

The in-ceiling bracket and speed dome body is shown as below. See Figure 5-1.

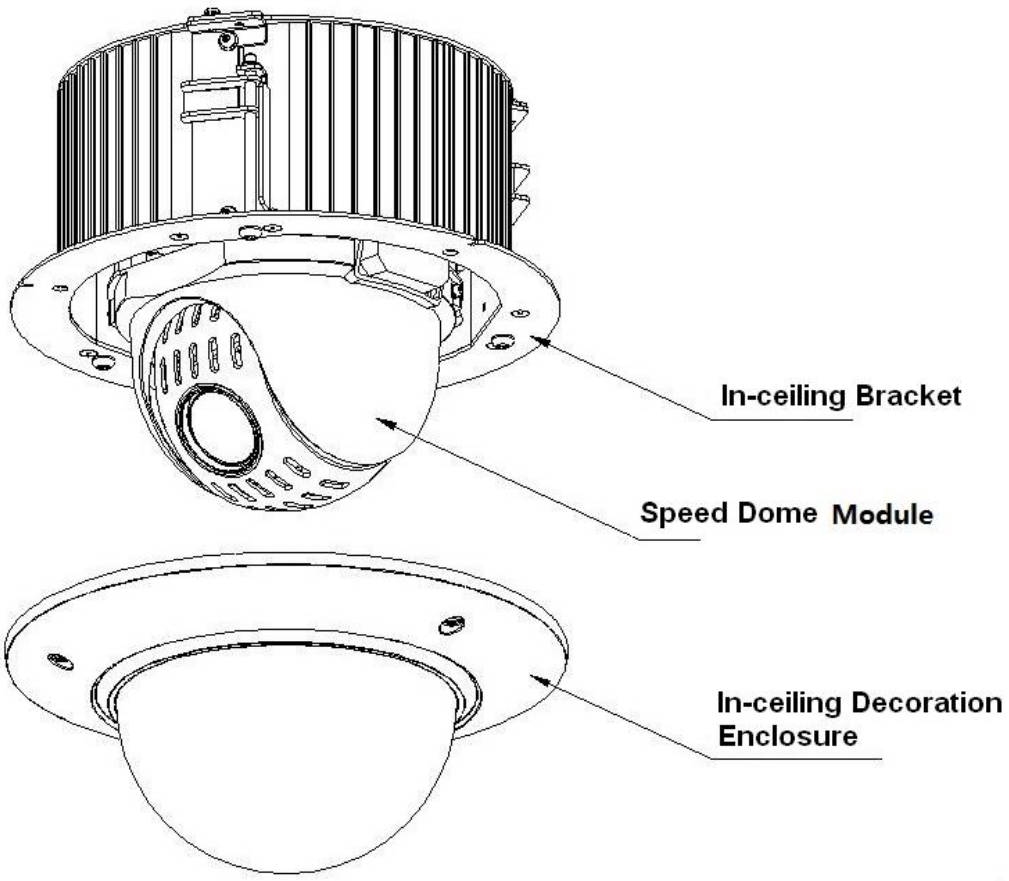

Figure 5-1

5.2 Installation Conditions

The in-ceiling speed dome can be installed in the hard construction ceiling in indoor environment. Before the installation, please make sure:

- The thickness of ceiling shall be between 10mm and 40mm.
- The ceiling can sustain at least 8X weight of the speed dome and bracket.

5.3 Installation Steps

Step 1

As it is shown in Figure 5-2, it is to paste the in-ceiling installation position map after the mounting location has been confirmed, and then take it as template to draw punching position on the ceiling and dig holes.

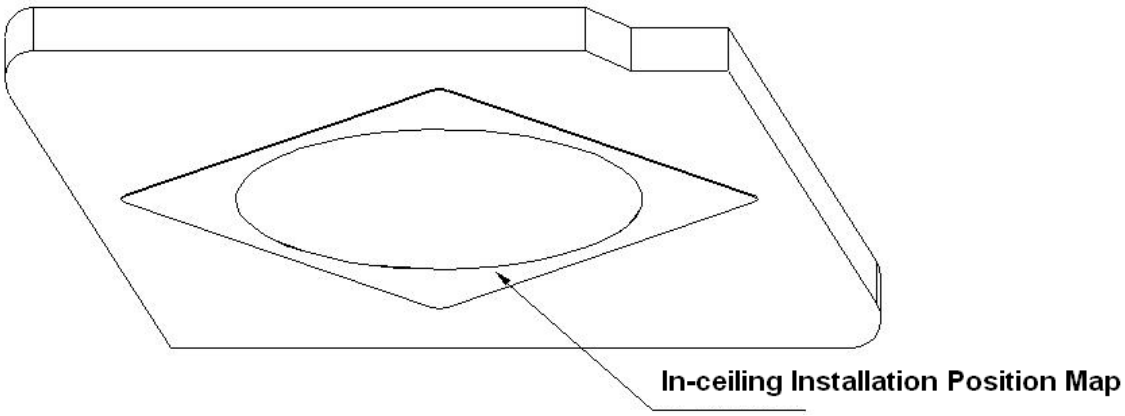

Figure 5-2

Step 2

As it is shown in Figure 5-3, Connect the composition cable and then put the cable into the hole you just dug. Push the in-ceiling bracket and dome body to the hole you just dug, twist the set screw to tighten the hanging board firmly.

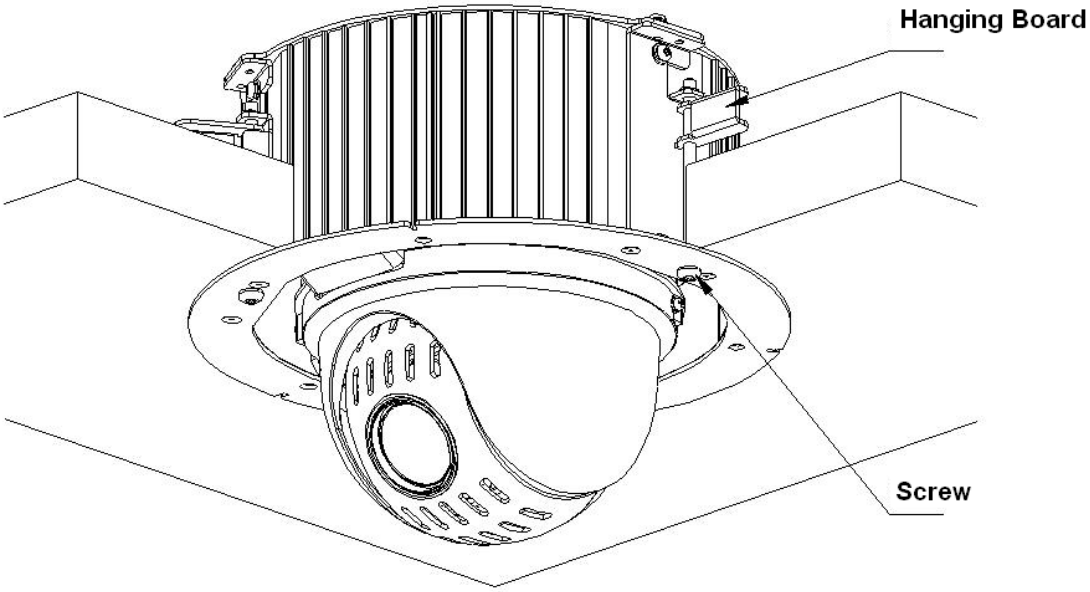

Figure 5-3

Step 3

As it is shown in Figure 5-4, use three screws to fix the in-ceiling decoration enclosure component on the in-ceiling bracket components and tighten them firmly. See Figure 5-5.

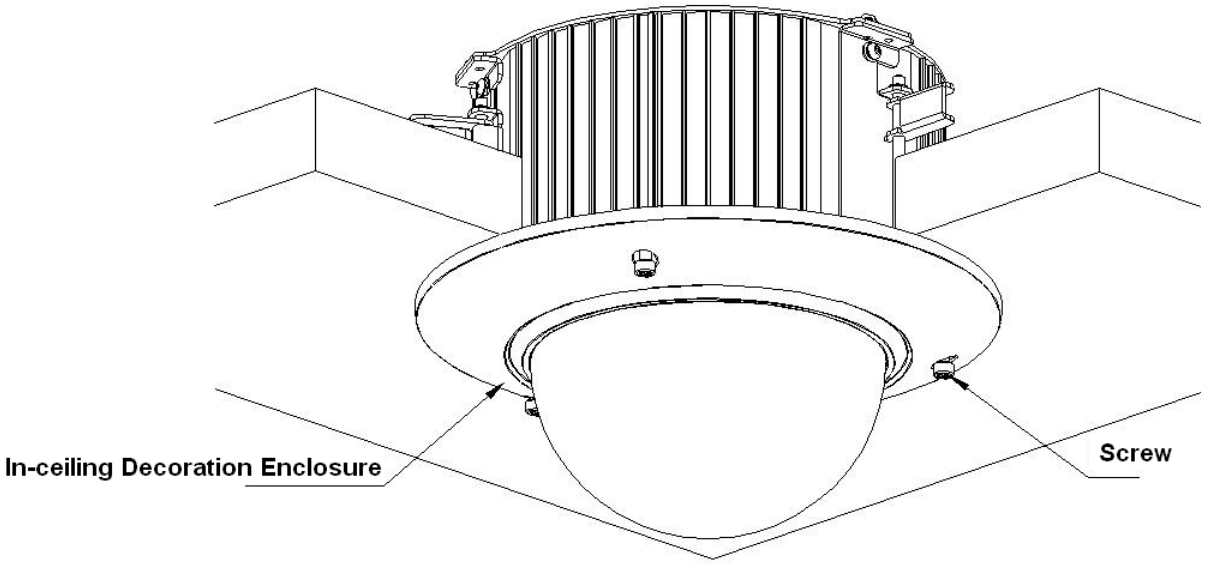

Figure 5-4

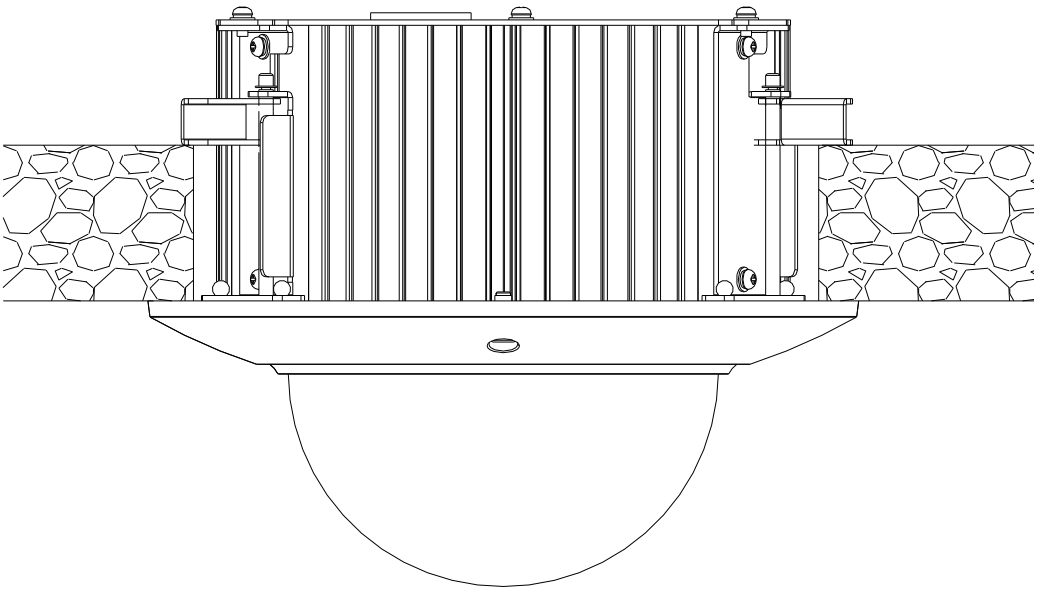

Figure 5-5

6 APPENDIX I THUNDER PROOF AND SURGE PROTECTION (Outdoors)

This series speed dome adopts TVS lighting protection technology. It can effectively prevent damages from various pulse signals below 6000V, such as sudden lighting and surge. While maintaining your local electrical safety code, you still need to take necessary precaution measures when installing the speed dome in the outdoor environment.

- The distance between the signal transmission cable and high-voltage device (or high-voltage cable) shall be at least 50 meters.
- Outdoor cable layout shall go under the penthouse if possible.
- For vast land, please use sealing steel tube under the land to implement cable layout and connects one point to the earth. Open floor cable layout is forbidden.
- In area of strong thunderstorm hit or near high sensitive voltage (such as near high-voltage transformer substation), you need to install additional high-power thunder protection device or lightning rod.
- The thunder protection and earth of the outdoor device and cable shall be considered in the building whole thunder protection and conform to your local national or industry standard.
- System shall adopt equal-potential wiring. The earth device shall meet anti-jamming and at the same time conforms to your local electrical safety code. The earth device shall not short circuit to N (neutral) line of high voltage power grid or mixed with other wires. When connect the system to the earth alone, the earth resistance shall not be more than 4Ω and earth cable cross-sectional area shall be no less than 25 mm². See Figure 6-1

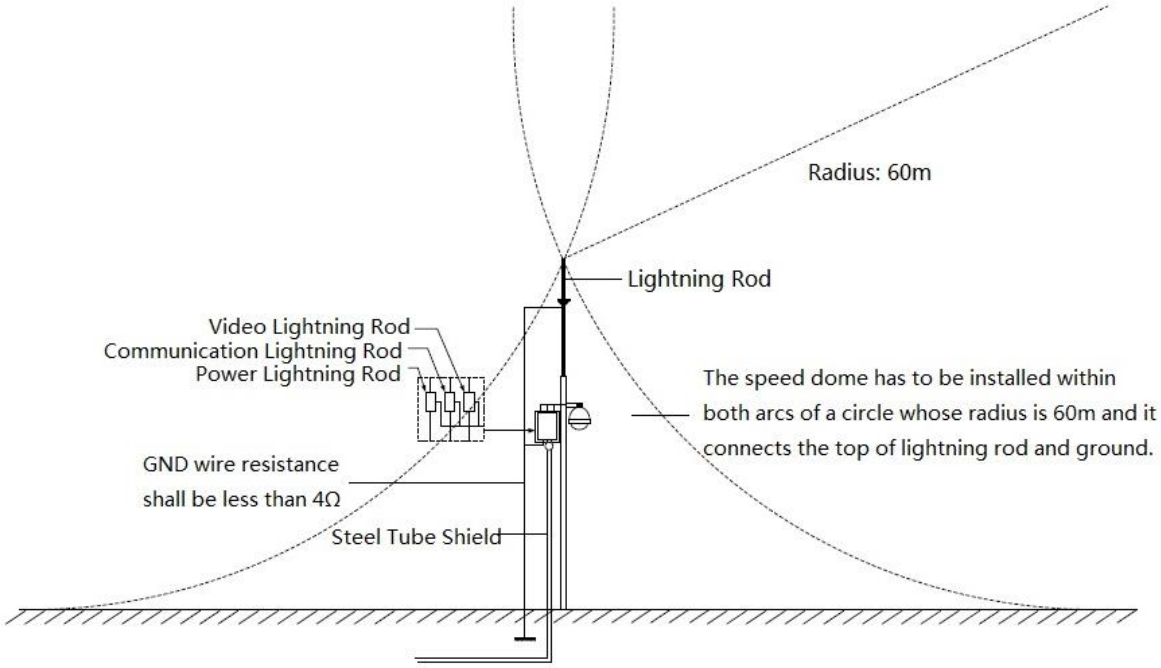

Figure 6-1

6.1 Lightning Protection (Indoors)

The yellow and green GND wire or GND screw of the speed dome should be reliably connected by several strands of copper wire with no less than 25mm^2 and indoor equipotential GND terminal. Please refer to Figure 6-2 for lightningproof installation mode.

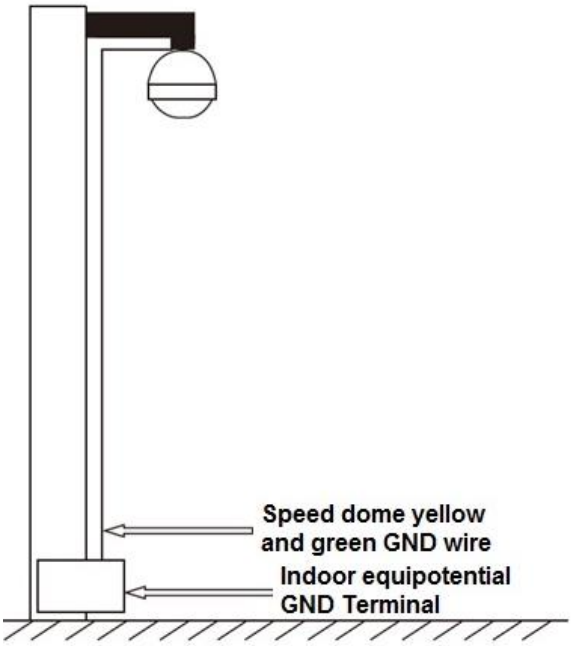

Figure 6-2

7 APPENDIX II ABOUT RS485 BUS

7.1 RS485 Bus Main Feature

RS485 is semi duplex communication cable of impedance 120Ω. Its max load amount is 32 effective loads (including main control device and devices to be charged).

7.2 RS485 Bus Transmission Distance

When we take 0.56mm (24AWG) twisted-pair as communication cable, the max transmission distance (theoretically) are listed below (according to different baud rates).

Baud Rate	Max Distance
2400 BPS	1800M
4800 BPS	1200M
9600 BPS	800M

In the following situations, the max transmission distance shall become shorter accordingly:

- The communication cable is a little bit thin;
- The surrounding environment has strong electromagnetic interference;
- There are too much devices connected to the RS485 bus;

And vice versa, the max transmission distance shall become longer.

7.3 The Problem in Practical Use

In practical usage, we usually adopt star type connection. The terminal resistance shall connect to the furthest two devices (Such as device 1# and device 15# in Figure 7-1). But this connection way does not conform to RS485 Bus standard. When the distances between devices are too long, the signal reflection occurs and anti-jamming decreases, thus the signal reliability becomes very low. You can see speed dome is not under control or speed dome is running automatically and cannot stop.

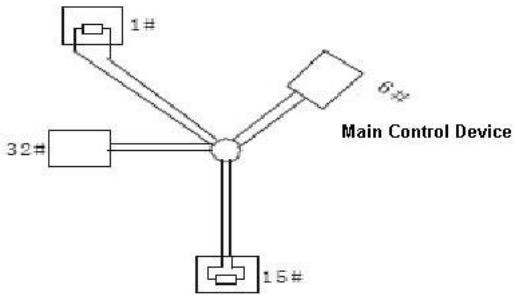

Figure 7-1

In this situation, we recommend RS485 distributor. This device can turn star type connection into the connection that conforms to RS485 bus industry standard, which can avoid the above mentioned problems and enhance communication reliability. See Figure 7-2.

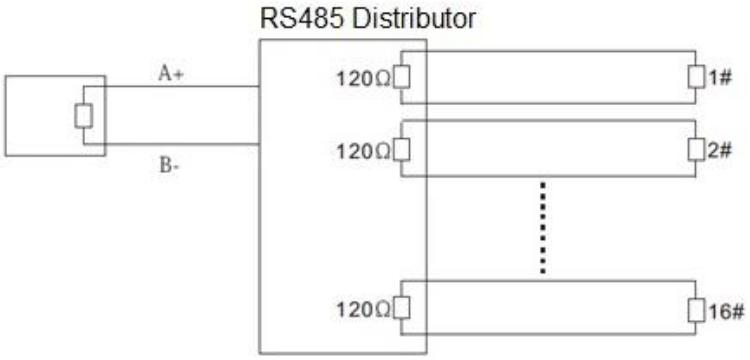

Figure 7-2

7.4 RS485 Bus FAQ

Phenomenon	Possible Reasons	Solution
Speed dome can run self-diagnosis but I cannot control it.	● Host address(baud rate) and speed dome address(baud rate) are not match; ● Positive and negative end of RS485 Bus are misconnected; ● Connection cable is loose； ● RS485 Bus connection are cut off;	● Modify host or speed dome setup ； ● Switch RS485 positive end and negative end； ● Fix connection cable firmly； ● Replace RS485 Bus.
I can control the speed dome but is not smooth	● RS485 Bus connection are not good； ● One RS485 bus is off； ● The distance between host and speed dome is too far； ● Parallel connected too much speed domes.	● Connect RS 485 Bus again； ● Replace RS485 Bus； ● Add terminal matching resistance； ● Add RS485 distributor.

8 APPENDIX III THE 24V AC WIRE DIAMETER AND TRANSMISSION DISTANCE RELATION TABLE

It is to recommend max transmission distance when the cable diameter is fixed and the 24V AC voltage loss rate is below 10%. For the AC device, the max permission voltage power consumption is 10%. For example, when a device of rated power 20W installed 141 inches (42m) away from the transformer, then the min cable diameter needed is 0.8000mm.

mm Feet（m） w	0.8000	1.000	1.250	2.000
5	488.52 （148.90）	763.31 （232.66）	1192.67 （363.53）	3053.25 （930.63）
10	244.26 （74.45）	381.66 （116.33）	596.34 （181.76）	1526.62 （465.31）
15	162.84 （49.63）	254.44 （77.55）	397.56 （121.18）	1017.75 （310.21）
20	122.13 （37.23）	190.83 （58.16）	298.17 （90.88）	763.31 （232.66）
25	97.70 （29.78）	152.66 （46.53）	238.53 （72.71）	610.65 （186.13）
30	81.42 （24.82）	127.22 （38.78）	198.78 （60.59）	508.87 （155.10）
35	69.79 （21.27）	109.04 （33.24）	170.38 （51.93）	436.18 （132.95）
40	61.06 （18.61）	95.41 （29.08）	149.08 （45.44）	381.66 （116.33）
45	54.28 （16.54）	84.81 （25.85）	132.52 （40.39）	339.25 （103.40）
50	48.85 （14.89）	76.33 （23.27）	119.27 （36.35）	305.32 （93.06）
55	44.41 （13.54）	69.39 （21.15）	108.42 （33.05）	277.57 （84.60）
60	40.71 （12.41）	63.61 （19.39）	99.39 （30.29）	254.44 （77.55）
65	37.58 （11.45）	58.72 （17.90）	91.74 （27.96）	234.87 （71.59）
70	34.89 （10.64）	54.52 （16.62）	85.19 （25.97）	218.09 （66.47）
75	32.57 （9.93）	50.89 （15.51）	79.51 （24.24）	203.55 （62.04）
80	30.53 （9.31）	47.71 （14.54）	74.54 （22.72）	190.83 （58.16）
85	28.74 （8.76）	44.90 （13.69）	70.16 （21.38）	179.60 （54.74）
90	27.14 （8.27）	42.41 （12.93）	66.26 （20.20）	169.62 （51.70）
95	25.71 （7.84）	40.17 （12.25）	62.77 （19.13）	160.70 （48.98）
100	24.43 （7.45）	38.17 （11.63）	59.63 （18.18）	152.66 （46.53）

9 APPENDIX IV12V AC WIRE GAUGE AND TRANSMISSION DISTANCE RELATION TABLE

It is to recommend max transmission distance when the cable diameter is fixed and the DC 12V voltage loss rate is lower than 10%. For the DC power supply devices, the max allowed voltage loss rate is 10%. The cable listed in the table below is copper wire (the resistivity of copper is ρ =0.0175Ω*mm²/m).

Feet (m) mm / w	0.8000	1.000	1.250	2.000
5	122.13（37.23）	190.83（58.16）	298.17（90.88）	763.31（232.66）
10	61.06（18.61）	95.41（29.08）	149.08（45.44）	381.66（116.33）
15	40.71（12.41）	63.61（19.39）	99.39（30.29）	254.44（77.55）
20	30.53（9.31）	47.71（14.54）	74.54（22.72）	190.83（58.16）
25	24.43（7.45）	38.17（11.63）	59.63（18.18）	152.66（46.53）
30	20.35（6.20）	31.80（9.69）	49.69（15.15）	127.22（38.78）
35	17.45（5.32）	27.26（8.31）	42.60（12.98）	109.04（33.24）
40	15.27（4.65）	23.85（7.27）	37.27（11.36）	95.41（29.08）
45	13.57（4.14）	21.20（6.46）	33.13（10.10）	84.81（28.85）
50	12.21（3.72）	19.08（5.82）	29.82（9.09）	76.33（23.27）
55	11.10（3.38）	17.35（5.29）	27.11（8.26）	69.39（21.15）
60	10.18（3.10）	15.90（4.85）	24.85（7.57）	63.61（19.39）
65	9.39（2.86）	14.68（4.47）	22.94（6.99）	58.72（17.90）
70	8.72（2.66）	13.63（4.15）	21.30（6.49）	54.52（16.62）
75	8.14（2.48）	12.72（3.88）	19.88（6.06）	50.89（15.51）
80	7.63（2.33）	11.93（3.64）	18.64（5.68）	47.71（14.54）
85	7.18（2.19）	11.23（3.42）	17.54（5.35）	44.90（13.69）
90	6.78（2.07）	10.60（3.23）	16.56（5.05）	42.41（12.93）
95	6.43（1.96）	10.04（3.06）	15.69（4.78）	40.17（12.25）
100	6.11（1.86）	9.54（2.91）	14.91（4.54）	38.17

Feet (m) mm w	0.8000	1.000	1.250	2.000
				（11.63）

10APPENDIX V WIRE GAUGE REFERENCE TABLE

Metric bare wire diameter （mm）	AWG	SWG	Bare wire cross section （mm^2）
0.050	43	47	0.00196
0.060	42	46	0.00283
0.070	41	45	0.00385
0.080	40	44	0.00503
0.090	39	43	0.00636
0.100	38	42	0.00785
0.110	37	41	0.00950
0.130	36	39	0.01327
0.140	35		0.01539
0.160	34	37	0.02011
0.180	33		0.02545
0.200	32	35	0.03142
0.230	31		0.04115
0.250	30	33	0.04909
0.290	29	31	0.06605
0.330	28	30	0.08553
0.350	27	29	0.09621
0.400	26	28	0.1257
0.450	25		0.1602
0.560	24	24	0.2463
0.600	23	23	0.2827
0.710	22	22	0.3958
0.750	21		0.4417
0.800	20	21	0.5027
0.900	19	20	0.6362
1.000	18	19	0.7854
1.250	16	18	1.2266
1.500	15		1.7663
2.000	12	14	3.1420
2.500			4.9080
3.000			7.0683

Note

- This manual is for reference only. Slight difference may be found in the user interface.
- All the designs and software here are subject to change without prior written notice.
- All trademarks and registered trademarks are the properties of their respective owners.
- If there is any uncertainty or controversy, please refer to the final explanation of us.
- Please visit our website or contact your local service engineer for more information.