INSTRUCTION MANUAL

IC720

TABLE OF CONTENTS

Features and Specifications

a. Overview 1

b. Features 2

c. IC720 App 2

d. Specifications 3-4

e. Dimensions 5

Camera Installation

a. Ceiling Installation 6-8

b. Corner/Pole Mount 9-11

Web GUI | IC720 Management

a. Network Connection 12

b. Logging In, and Main Interface 13-14

c. Connecting IC720 to an NVR 15-16

Appendices

a. Toxic or Hazardous Elements 17

1 | FEATURES AND SPECIFICATIONS

This section outlines the primary features of the IC Realtime IC720 Camera. It also outlines basic Architectural and Engineering specifications.

1a. OVERVIEW

This IC Realtime series product is an excellent situational awareness IP Camera – the camera designed to see everything with no blind spots. It adopts a dual lens design, and is powered by a robust Qualcomm, Snapdragon 800 series processor, enabling it to maintain reliable, 24/7 operation. Utilizing both H.264 video compression and AAC audio compression technology enables the highest quality of recorded audio/video, while maintaining the lowest bitrate utilization.

The IC720 series camera is an HD, dual lens 12 MegaPixel IP Camera with an integrated microphone. The dual lens design of the camera allows for video capture in a full 360 degree vertical and 360 degree horizontal format. This camera is fully suited for full operation as a standalone device.

The 12MP recording resolution and extreme wide angle lens design makes this IPC well equipped for installation in various institutions ranging from residential, commercial, governmental, and enterprise environments.

1b. FEATURES

IC Realtime IC720 series IP Cameras all support the following features:

HD, 360 x 360 Video Monitoring: This IP Camera uses two SONY IMX172 (12MP) sensors.

Secure Archiving: Audio Video data is compressed and packaged into a secure, and watermarked video format. This bolsters archived video integrity, and prevents vicious data manipulation. Video is also watermarked with special data for evidentiary purposes.

Compression Format: H.264 video and AAC audio enables high quality video recording while maintaining the lowest file sizes possible.

SD Card Storage: As a standalone device, the IPC can hold a 32GB micro SD card suitable for storing video direct from the camera.

1c. IC720 APP

Network Operation: Full system control (including live view, playback, backup,VPTZ control, and system configuration) is available with over the network. Client software is available for both Mac and PC systems.

VPTZ Control: This IPC includes a special dewarping algorithm, enabling users to 'Virtually' Pan/Tilt/Zoom across a high resolution image, in order to get the highest visibility and situational awareness from the camera.

1.d SPECIFICATIONS

CAMERA	**Field of View**	360 x 360 degree - No Blind Spots!
	Optical Configuration	2 x Fish Eye Lens; Back-to-Back
	Lens	All Glass, FOV=188º, f/2.8
	Image Sensor	2 x SONY IMX172 Type 1/2.3'', 12 Megapixel, CMOS Effective Pixels: 4000 x 3000
	Resolution and FPS	2048 x 2048 @ 22 FPS per sensor (8MP) 2560 x 2560 @ 20 FPS per sensor (12.5MP) 2780 x 2780 @ 10 FPS per sensor (15.4MP)
	Image Signal Processing	Auto White Balance, Auto Gain, Noise Reduction
	Platform	Qualcomm Snapdragon 800
	Video Compression	H.264
	Bit Rate	Min: 4Mbit/s ~ 12Mbit/s ~ (Low ~ High Quality: Recommended 8 Mbit/s)

DAY/NIGHT	**IR CUT**	Electromagnetic IR-CUT switch
	IR Illumination	External IR Illuminator
AUDIO	**Microphone**	Built in
	Audio Compression	G.711u
	Bit Rate	16-64Kbps
NETWORK	**Ethernet**	RJ-45 (10/100 Base-T)
	Protocol	HTTP, HTTPS, RTSP, TCP, UDP
	ONVIF	Profile S
	Max Users	3

1.d SPECIFICATIONS (Continued)

STORAGE	**NVR**	IC Realtime NVR-8128; NVR-8256
	Memory Slot	Micro SD (up to 32GB

POWER	**Power Supply**	12VDC, PoE
	Power Consumption	~8 Watts

OTHER	**Mount**	Wall, Ceiling, Corner, Pole
	Size	4.2'' x 11.7'' x 2.9'' (108mm x 293mm x 73mm)
	Weight	~3 lbs
	Protection	For Indoor use only
	Working environment	40-95 degrees F / 10-35 degrees C; 10%-80%

1.e DIMENSIONAL VIEWS

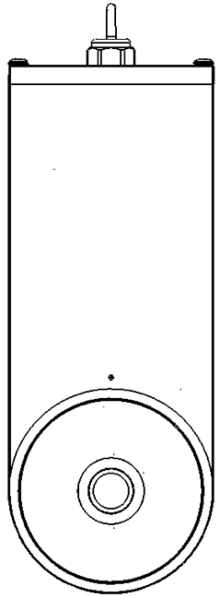

The 'front' of the IC720 Camera. Ceiling mount orientation.

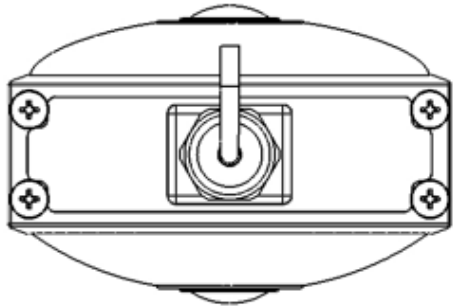

Bottom view of the IC720 Camera. The cable harness extends out of the center.

2 | CAMERA INSTALLATION

2.a CEILING INSTALLATION: STEP BY STEP

This section outlines the proper way to mount and install an IC720 series IP Camera. Suitable methods of installing the IPC include either Ceiling installation, Corner installation, or Pole Installation. Note that hardware including screws and anchors are included for the camera installation.

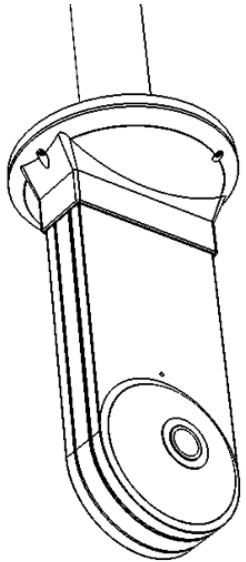

The IC720 in a Ceiling mount configuration.

Step 1: Install the Beauty Shroud
Slide the shroud over the IC720 Camera body from the top.

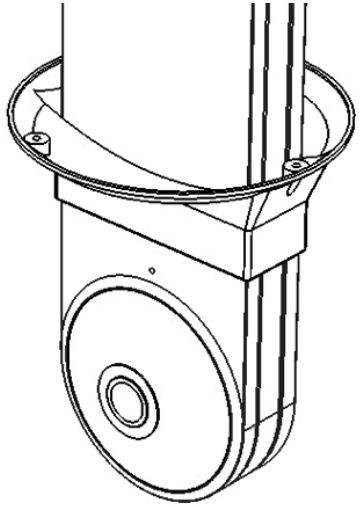

The Beauty shroud simply slides over the camera body to provide a sleek installation fit and feel.

Step 2: Install the Interface Plate
Attach the interface plate with (4) #10-24 Pan Head screws and locking washers. Tighten to secure the interface plate to the camera body.

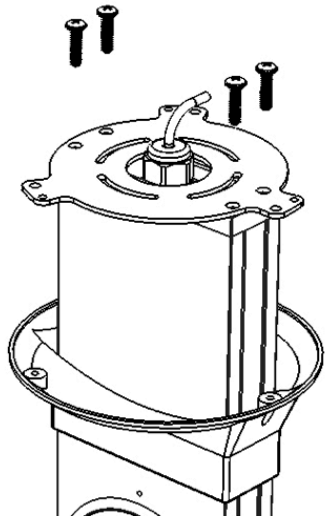

The Beauty shroud simply slides over the camera body to provide a sleek installation fit and feel.

Step 3: Connect Wiring

Pass cables the cables through the pole mount and then connect your Ethernet and power cables (if not using Power Over Ethernet). Once physical cable connections are established, the camera can be permanently affixed to the interface plate.

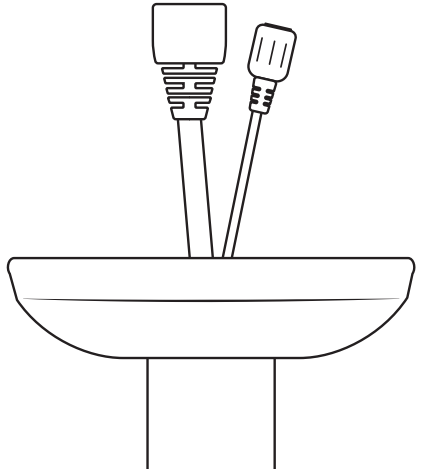

Ethernet cable being plugged into modem, routher, or switch board.

Step 4: Secure the Camera Assembly to the Ceiling Mount

Secure the assembly to the ceiling mount itself with (3) M3 Cap screws.

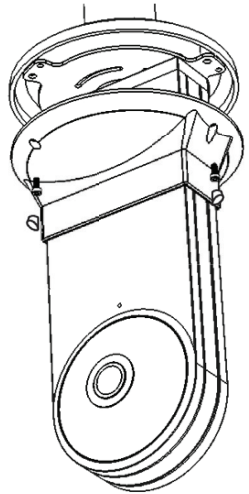

The full camera assembly, prior to permanent installation. (3) M3 Cap Screws fix the camera assembly to the ceiling mount.

2.b CORNER/POLE MOUNT: STEP BY STEP

This section outlines the proper way to mount and install an IC720 series IP Camera. Suitable methods of installing the IPC include either Ceiling installation, Corner installation, or Pole Installation. Note that hardware including screws and anchors are included for the camera installation.

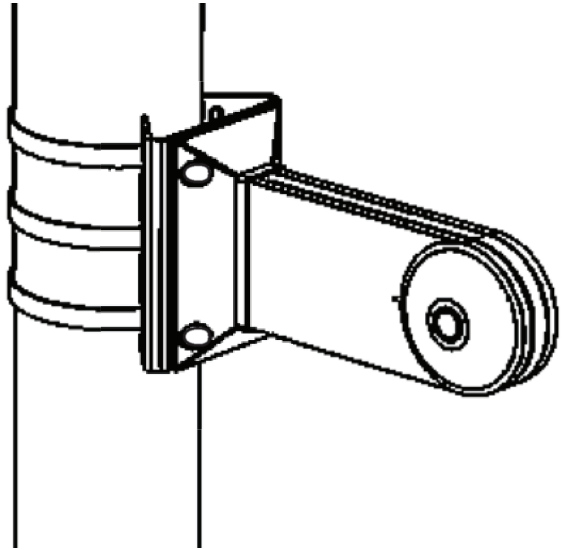

The IC720 Beam in a Pole Mount installation.

Step 1: Install the Beauty Shroud

Slide the shroud over the IC720 Camera body from the top.

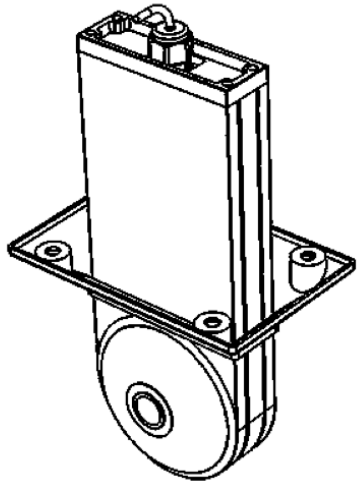

The Beauty shroud simply slides over the camera body to provide a sleek installation fit and feel.

Step 2: Install the Interface Plate

Attach the interface plate with (4) #10-24 Pan Head screws and locking washers. Tighten to secure the interface plate to the camera body.

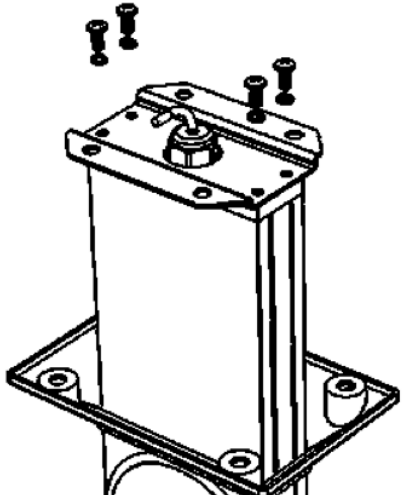

Attaching the interface plate to the camera body.
Note: Install the beauty shroud prior to this step!

Step 3: Connect Wiring

Connect your Ethernet and power cables (if not using Power Over Ethernet). Once physical cable connections are established, the camera can be permanently affixed to the interface plate.

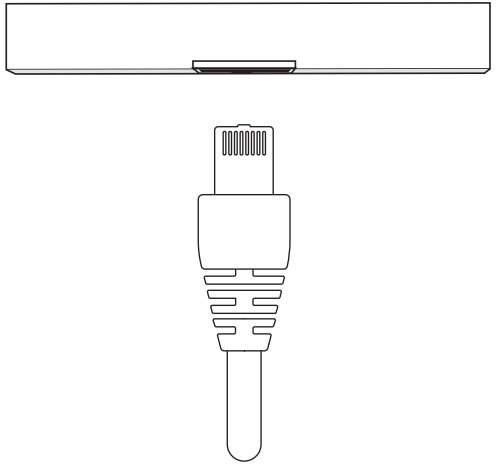

Ethernet cable being plugged into modem, routher, or switch board.

Step 4: Secure the Camera Assembly to the Pole Mount

Secure the assembly to the ceiling mount itself with (4) M8 Pan Head screws.

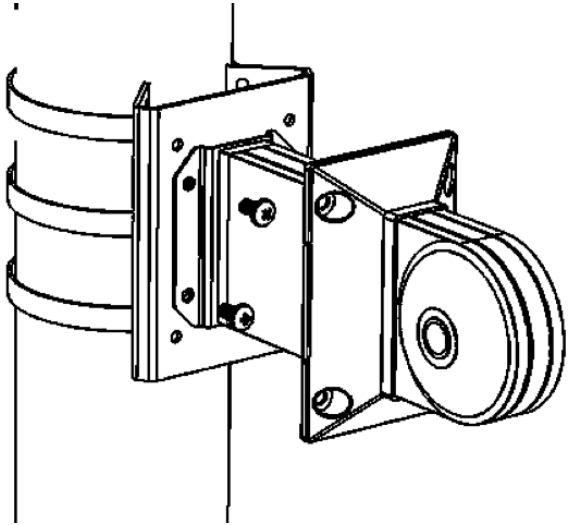

The full camera assembly, prior to permanent installation. (4) M8 Cap Screws fix the camera assembly to the pole mount.

3 | WEB GUI | IC720 MANAGEMENT

This section outlines how to assign an IP address to the camera, and how to access and configure the IC720 Beam via it's built in Web Interface. The Web Interface is used primarily to configure the camera parameters initially. The IC720 application is the desired client software to use with when viewing the IC720 Beam series camera.

3a. NETWORK CONNECTION

IC Realtime IC720 Beam series IP Cameras all support the following features:

Step 1: Ensure the Camera is physically connected to your Network, and Powered ON.

Patch the IP Camera into your network with a standard Ethernet cable. Provide the camera with power either via PoE or with the separate 12VDC power input jack.

Step 2: Assign an IP address to the IP Camera.

The IC720 Beam Series camera (and all ICR IP Cameras) are designed to automatically assign an IP address from the router on your local area network (via DHCP).

You can use our IP Auto Search utility to rapidly find and change IP addresses for IC720 Beam series IP Cameras. The utility is available on our support page at :

http://www.icrealtime.com/support/software-downloads

3.b LOGGING IN, AND MAIN INTERFACE

Step 1: Open up your Web Browser (Safari, Chrome, Firefox, or IE) and input the IP address of your IP camera.

In Example, open Safari and browse to http://192.168.1.108

Step 2: Login to the camera with the default credentials

By default, the username is 'admin' and the password is 'admin'. It is always strongly recommended to change the default passwords after the initial setup. The cameras login page should appea as shown.

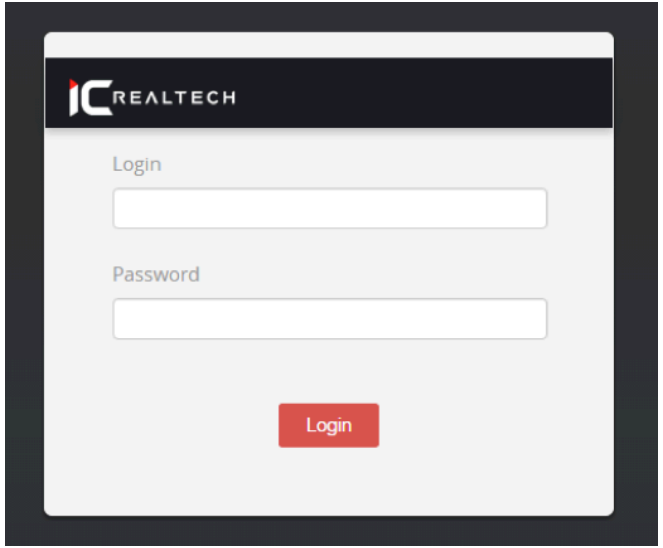

Step 3: Change setup parameters as needed

Once logged into the Web Interface, you will be presented with 5 options from the Menu Tree on the left side:

Camera Menu allows you to change Resolution, FrameRate, and BitRate parameters.

Network Menu allows you to assign an IP address, as well as change the default port settings.

System Menu allows for configuration of the Date/Time, Language, as well as the IC720 Beam camera device logs.

Accounts Menu allows you to manage accounts (Add/Delete/Modify), change passwords, and create different Roles.

Information Menu provides Version information, as well as Firmware Updates for the IC720 Beam series camera.

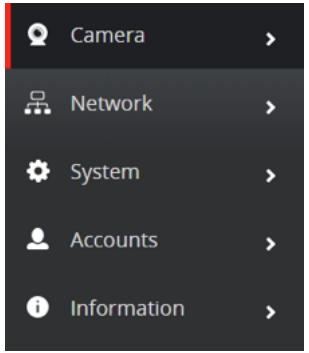

3.c Connecting IC720 to an NVR

IC720 utilizes the industry standard ONVIF protocol, so connecting to an NVR should be a breeze. Each image of the camera (2 total) has an independent ONVIF port number for connection. Here's an example of pairing the IC720 device to an ICRealtime NVR.

Step 1: Login to the ICRealtime NVR series device, and navigate to the 'Remote Devices' menu.

Step 2: Hit 'Device Search' on this page to scan your LAN for any IC720 series cameras.

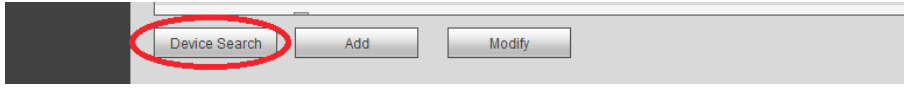

Step 3: Double click on the IP Address of your IC720 from the 'Device Search' menu to add the first IC720 sensor.
This will automatically add this to your NVR, without needing to input any additional information.

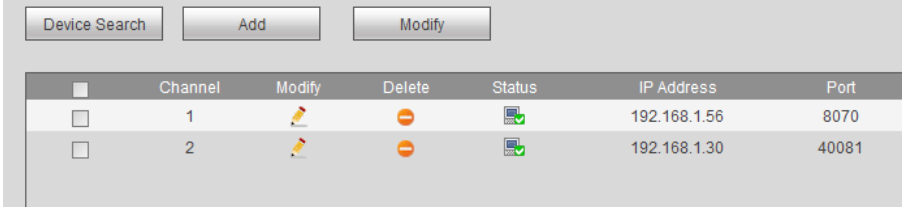

Step 4: Double click on the same IP Address again, if you want to add the second sensor (you will need to change the port number in the table below).
Again, this will automatically add the First sensor connection info to your NVR. Simply select this newly added Remote Device, click Modify, and change the Port Number from 8070 to 8071, and Save. This will pair the NVR to the second sensor!

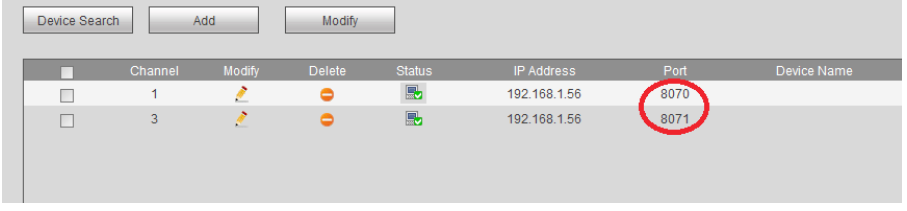

4 | APPENDIX: TOXIC AND HAZARDOUS MATERIALS REPORT

Component Name	Toxic or Hazardous Materials or Elements					
	Pb	Hg	Cd	Cr VI	PBB	PBDE
Circuit Board Component	o	o	o	o	o	o
Device Case	o	o	o	o	o	o
Wire and Cable	o	o	o	o	o	o
Packaging Components	o	o	o	o	o	o
Video Compression	o	o	o	o	o	o
Bit Rate	o	o	o	o	o	o

Note

This user manual is intended for reference only. Slight differences may be found in the user interface as products continually develop.

All designs and software herein are subject to change without prior written consent.

All trademarks and registered trademarks mentioned are the properties of their respective owners.

Please visit **http://www.icrealtime.com** for more information.

IC720

© 2015 IC Realtime, LLC.
3050 N Andrews Ave Ext
Pompano Beach, FL 33064
Phone 866.997.9009 • Fax 866.860.3860