HDAVS Eyeball Camera

User's Manual

V1.0.1

Foreword

General

This user’s manual (hereinafter referred to be "the Manual") introduces the functions, installation and operations of the camera.

Safety Instructions

The following categorized signal words with defined meaning might appear in the Manual.

Signal Words	Meaning
WARNING	Indicates a medium or low potential hazard which, if not avoided, could result in slight or moderate injury.
CAUTION	Indicates a potential risk which, if not avoided, may result in property damage, data loss, lower performance, or unpredictable result.
TIPS	Provides methods to help you solve a problem or save you time.
NOTE	Provides additional information as the emphasis and supplement to the text.

Revision History

No.	Version	Revision Content	Release Date
1	V1.0.0	First release.	2017.10

Privacy Protection Notice

As the device user or data controller, you might collect personal data of others' such as face, fingerprints, car plate number, Email address, phone number, GPS and so on. You need to be in compliance with the local privacy protection laws and regulations to protect the legitimate rights and interests of other people by implementing measures include but not limited to: providing clear and visible identification to inform data subject the existence of surveillance area and providing related contact.

About the Manual

- The Manual is for reference only. If there is inconsistency between the Manual and the actual product, the actual product shall govern.
- We are not liable for any loss caused by the operations that do not comply with the Manual.
- The Manual would be updated according to the latest laws and regulations of related regions. For detailed information, see the paper User's Manual, CD-ROM, QR code or our

official website. If there is inconsistency between paper User's Manual and the electronic version, the electronic version shall prevail.

- All the designs and software are subject to change without prior written notice. The product updates might cause some differences between the actual product and the Manual. Please contact the customer service for the latest program and supplementary documentation.
- There still might be deviation in technical data, functions and operations description, or errors in print. If there is any doubt or dispute, please refer to our final explanation.
- Upgrade the reader software or try other mainstream reader software if the Guide (in PDF format) cannot be opened.
- All trademarks, registered trademarks and the company names in the Manual are the properties of their respective owners.
- Please visit our website, contact the supplier or customer service if there is any problem occurred when using the device.
- If there is any uncertainty or controversy, please refer to our final explanation.

Important Safeguards and Warnings

CAUTION

Electrical Safety

- All installation and operation should conform to your local electrical safety codes.
- The power source shall conform to the requirement of the Safety Extra Low Voltage (SELV) standard, and supply power with rated voltage which conforms to Limited power Source requirement according to IEC60950-1. Please note that the power supply requirement is subject to the device label.
- A readily accessible disconnect device shall be incorporated in the building installation wiring.
- Make sure if the camera power adapter meets the camera operating voltage requirement before powering up the device (The material and length of the power cable might influence the device voltage).
- Prevent the power cable from being trampled or pressed, especially the plug, power socket and the junction extruded from the device.
- We assume no liability or responsibility for all the fires or electrical shock caused by improper handling or installation.

Environment

- Do not aim the device at strong light to focus, such as lamp light and sun light.
- Transport, use and store the device within the range of allowed humidity and temperature.
- Keep the camera away from water or other liquid to avoid damages to the internal components.
- Keep sound ventilation to avoid heat accumulation.
- Heavy stress, violent vibration or water splash are not allowed during transportation, storage and installation.
- Pack the device with standard factory packaging or the equivalent material when transporting the device.
- It is recommended to use the device together with lightning arrester to improve lightning protection effect.
- It is recommended to get the grounding holes to be grounded to enhance the reliability of the device.
- It is recommended to use qualified video transmission cable to improve video quality. It is recommended to use RG59 coaxial cable or higher standard.

WARNING

- Use standard components or accessories provided by manufacturer and make sure the

device is installed and maintained by professional engineers.

- The surface of the image sensor should not be exposed to laser beam radiation in an environment where a laser beam device is used.
- Do not provide two or more power supply sources for the device; otherwise it might damage the device.
- When the camera is in the condition of PoC power supply, do not connect any other device between the camera and PoC transceiver including UTC, Balun, optical transceiver, distributor and convertor and so on; otherwise, the device might get burned.
- PoC supply voltage is up to 52V. Do not dismantle the device during normal operation; otherwise it might cause danger to both device and users due to high voltage.

Regulatory Information

The regulatory information herein might vary according to the model you purchased. Some information is only applicable for the country or region where product is sold.

FCC Information

CAUTION

Changes or modifications not expressly approved by the party responsible for compliance could void the user's authority to operate the equipment.

FCC conditions:

This device complies with part 15 of the FCC Rules. Operation is subject to the following two conditions:

- This device may not cause harmful interference.
- This device must accept any interference received, including interference that may cause undesired operation.

FCC compliance:

This equipment has been tested and found to comply with the limits for a digital device, pursuant to part 15 of the FCC Rules. This equipment generate, uses and can radiate radio frequency energy and, if not installed and used in accordance with the guide, may cause harmful interference to radio communication.

- For class A device, these limits are designed to provide reasonable protection against harmful interference in a commercial environment. Operation of this equipment in a residential area is likely to cause harmful interference in which case the user will be required to correct the interference at his own expense.
- For class B device, these limits are designed to provide reasonable protection against harmful interference in a residential installation. However, there is no guarantee that interference will not occur in a particular installation. If this equipment does cause harmful interference to radio or television reception, which can be determined by turning the equipment off and on, the user is encouraged to try to correct the interference by one or more of the following measures:
    - Reorient or relocate the receiving antenna.
    - Increase the separation between the equipment and receiver.
    - Connect the equipment into an outlet on a circuit different from that to which the receiver is connected.
    - Consult the dealer or an experienced radio/TV technician for help.

Table of Contents

Foreword ..... **I**
1 Introduction **1**
1.1 General 1
1.2 Features 1
2 Design **2**
2.1 Dimension 2
2.2 Cable 3
3 Installation **5**
4 Configuration **8**
4.1 Opening Main Menu 8
4.2 Setting Audio Input 9
4.3 Operating OSD Menu 11
5 Maintenance **13**

1 Introduction

1.1 General

This series of products comply with the HDAVS standard and support the transmission of video and control signal over coaxial cable. They produce video signal with megapixel resolution and require HAVR device that comply with the HDAVS standard to achieve high speed, long distance and zero lag transmission of the signal. They are applicable to cover the high definition monitoring needs for locations like financial center, telecom site, supermarket, hotel, government, school and factory.

1.2 Features

- 720p series support over 800 meter real-time transmission of video and control signal from RG59 cable; for 1080p to 4k series, the distance is 500 meter.
- Excellent low-light performance with IR or night vision technology.
- Configuring devices easily with OSD menu.
- Support switching between HD/SD outputs.
- IP67 rated.

2 Design

2.1 Dimension

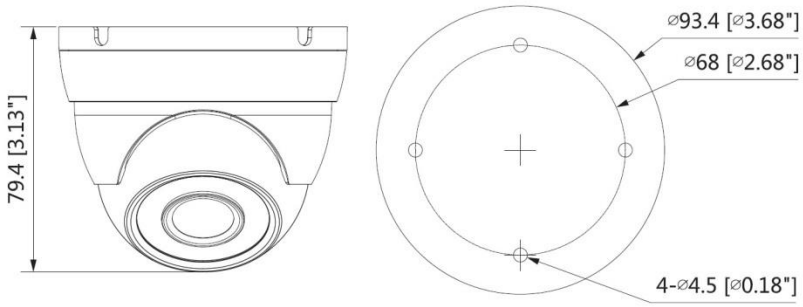

Figure 2-1 Model A (mm [in])

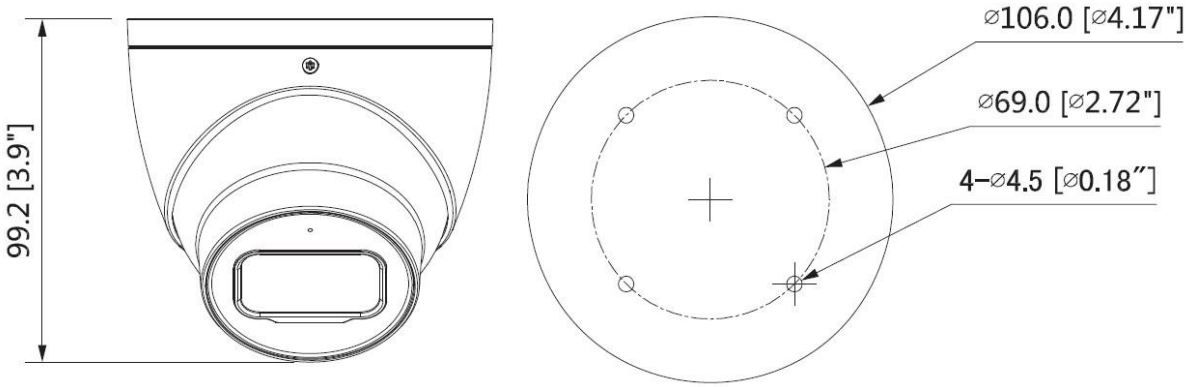

Figure 2-2 Model B (mm [in])

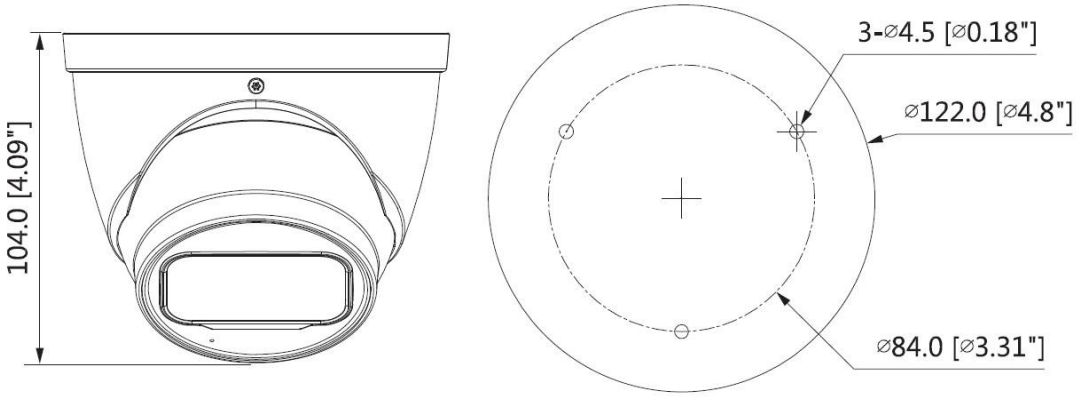

Figure 2-3 Model C (mm [in])

2.2 Cable

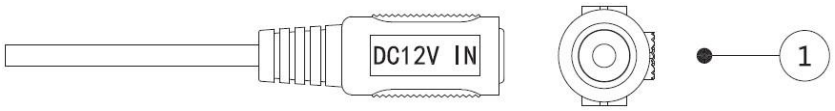

Figure 2-4

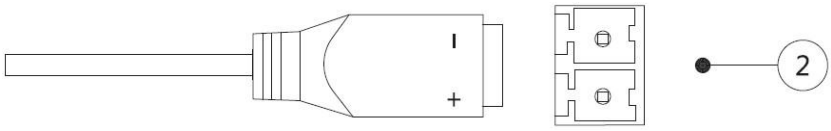

Figure 2-5

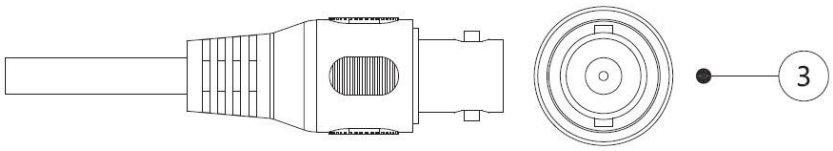

Figure 2-6

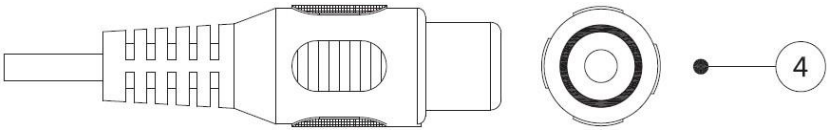

Figure 2-7

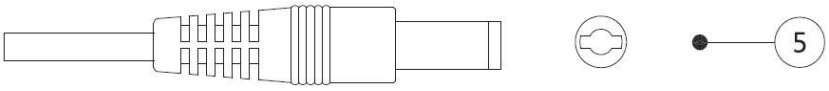

Figure 2-8

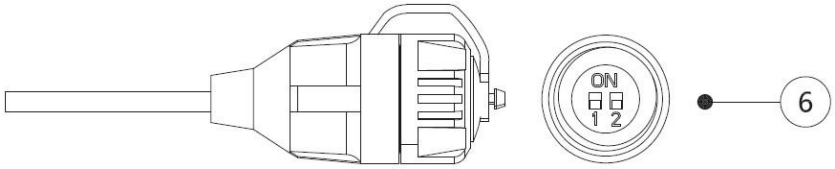

Figure 2-9

For more information about cable ports, see Table 2-1; for the operation method of ⑥(DIP switch), see Table 2-2.

No.	Port Name	Function
①	DC 12V Power Input	Inputs DC 12V power. Please be sure to supply power as instructed in the Manual. ⚠ CAUTION Device abnormity or damage could occur if power is not supplied correctly.

No.	Port Name	Function
②	DC 12V or AC 24V Power Input	Inputs DC 12V or AC 24V power. Please be sure to supply power as instructed in the Manual. CAUTION Device abnormity or damage could occur if power is not supplied correctly.
③	Video Output	Connects to HAVR to output video signal.
④	Audio Input	Connects to sound-pick-up devices to receive analog audio signal.
⑤	Power Output	Supplies DC12V 2W power.
⑥	DIP Switch	Dial switches to change output mode. Switch up indicates "ON", switch down indicates "OFF."

Table 2-1

Switch1	Switch2	Output Mode
OFF	OFF	AVS
ON	ON	CVBS
ON	OFF	AHD
OFF	ON	TVI

Table 2-2

NOTE

Cable type might vary with different cameras, and the actual product shall prevail.

3 Installation

CAUTION

- Make sure the mounting surface is strong enough to hold at least three times of the camera weight.
- The following figure is for reference only, and the actual product shall prevail.

For the installation diagram and item list of model A, see Figure 3-1 and Table 3-1, for those of model B and model C, see Figure 3-2 and Table 3-2.

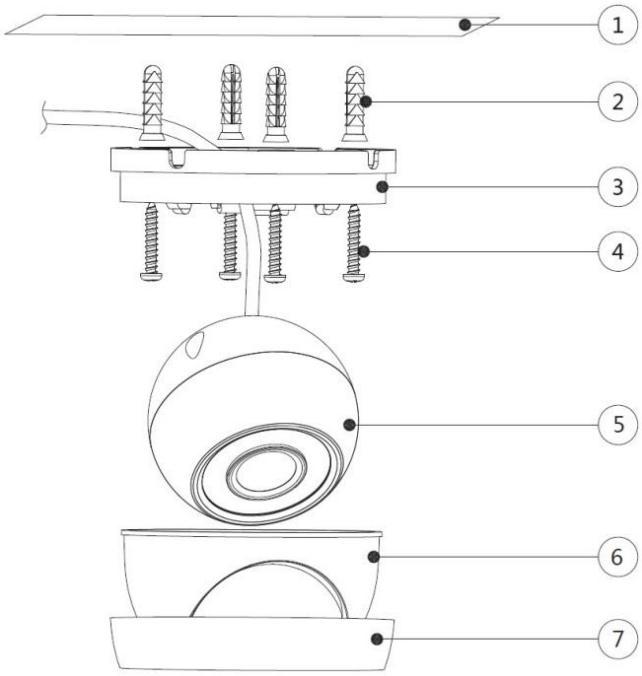

Figure 3-1

No.	Item	No.	Item	No.	Item	No.	Item
①	Mounting surface	②	Expansion bolt	③	Pedestal	④	Self-tapping screw
⑤	Device	⑥	Enclosure	⑦	Fixing ring		

Table 3-1

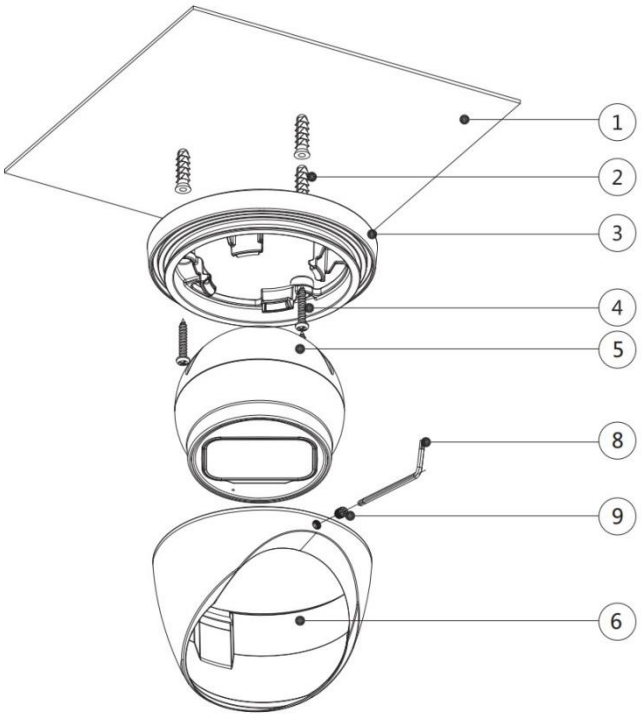

Figure 3-2

No.	Item	No.	Item	No.	Item	No.	Item
①	Mounting surface	②	Expansion bolt	③	Pedestal	④	Self-tapping screw
⑤	Device	⑥	Enclosure	⑧	Wrench	⑨	Locking screw

Table 3-2

Step 1 Find the mounting template sticker from the accessory pack and stick it to the mounting surface①

Step 2 Drill screw holes (and the cable outlet hole if it needs to go through the mounting surface) on the mounting surface as indicated on the mounting template, then insert expansion bolts② from the accessory pack in the screw holes.

Step 3 The disassembly way of model A is different from which of model B and model C.

- For model A, hold the pedestal③ tightly and keep the device⑤ upward, rotate the fixing ring⑦ counterclockwise until you can detach it from above, and then take off the pedestal③.
- For model B and model C, loosen the locking screw⑨ with the supplied wrench⑧ and take the pedestal③ off.

Step 4 Adjust the location of the pedestal③ according to cable outlet requirement (top out or side out), then pull the cable out through mounting surface or the side cable tray. Align the screw holes on the pedestal③ to those on the mounting surface, then put in and fasten the supplied self-tapping screws④ to attach the device⑤ to the mounting surface.

Step 5 Connect the camera to power source and the HAVR device, and the live view screen will be displayed.

Step 6 The assembly and adjustment way of model A is different from which of model B and model C.

- For model A, put the fixing ring⑦ back to hold the enclosure⑥, leave some spaces enough for you to adjust the device⑤. Aim the lens to the ideal angle (see Figure 3-3) and fasten the fixing ring⑦.

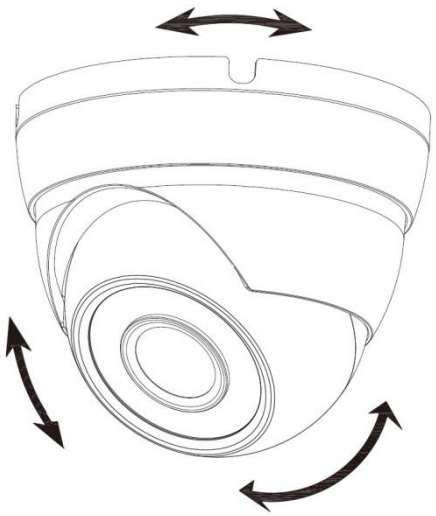

Figure 3-3

- For model B and model C, put the enclosure⑥ back on and adjust the locking screw⑨ to hold it, leave some spaces enough for you to adjust the device⑤. Aim the lens to the ideal angle and adjust the focus until you get clear image (see Figure 3-4) and fasten the locking screw⑨.

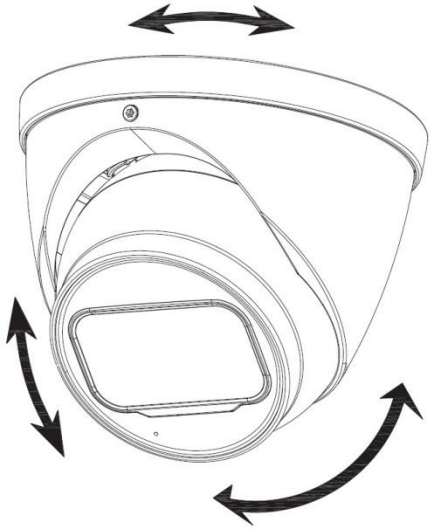

Figure 3-4

TIPS

- For model B and model C, it is easier to fit the enclosure⑥ to the pedestal③ if you put the higher end in first and then the lower end.
- For the models with vari-focal lens, you can adjust the zoom and focus through HAVR device.

4 Configuration

Power up the camera and connect it to HAVR device with coaxial cable, then the live view screen is displayed. The following instructions will guide you to configure your camera.

NOTE

The number of the coaxial port on HAVR will display at the lower left corner of the live view window to indicate the corresponding camera.

4.1 Opening Main Menu

Step 1 In the live view screen interface, right-click anywhere on the screen.
The shortcut menu is displayed. See Figure 4-1.

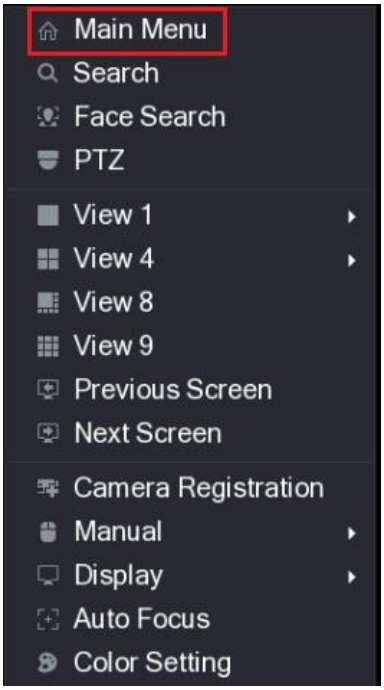

Figure 4-1

Step 2 Click **Main Menu**.
The **Main Menu** interface is displayed. See Figure 4-2.

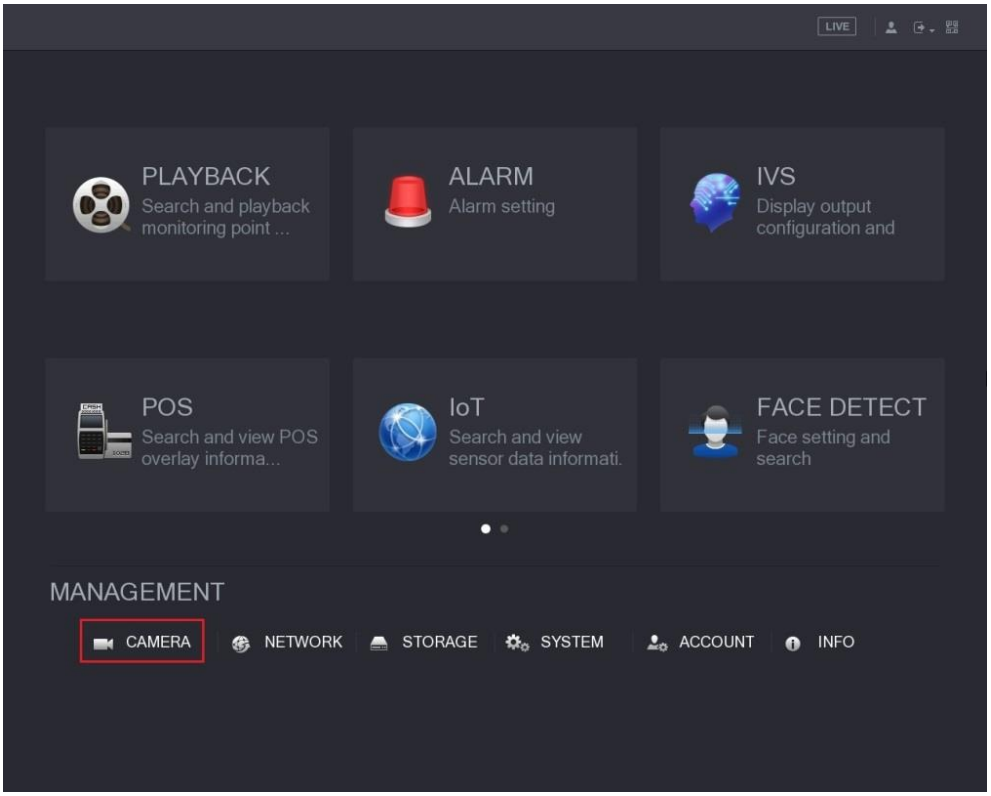

Figure 4-2

NOTE

Right-click anywhere on the screen to return to the previous menu until you goes back to the live view screen interface.

4.2 Setting Audio Input

NOTE

Audio signal acquisition is available on select models.

Step 1 In the **Main Menu** interface (Figure 4-2), select **CAMERA > ENCODE > Encode**. The Encode setting interface is displayed. See Figure 4-3.

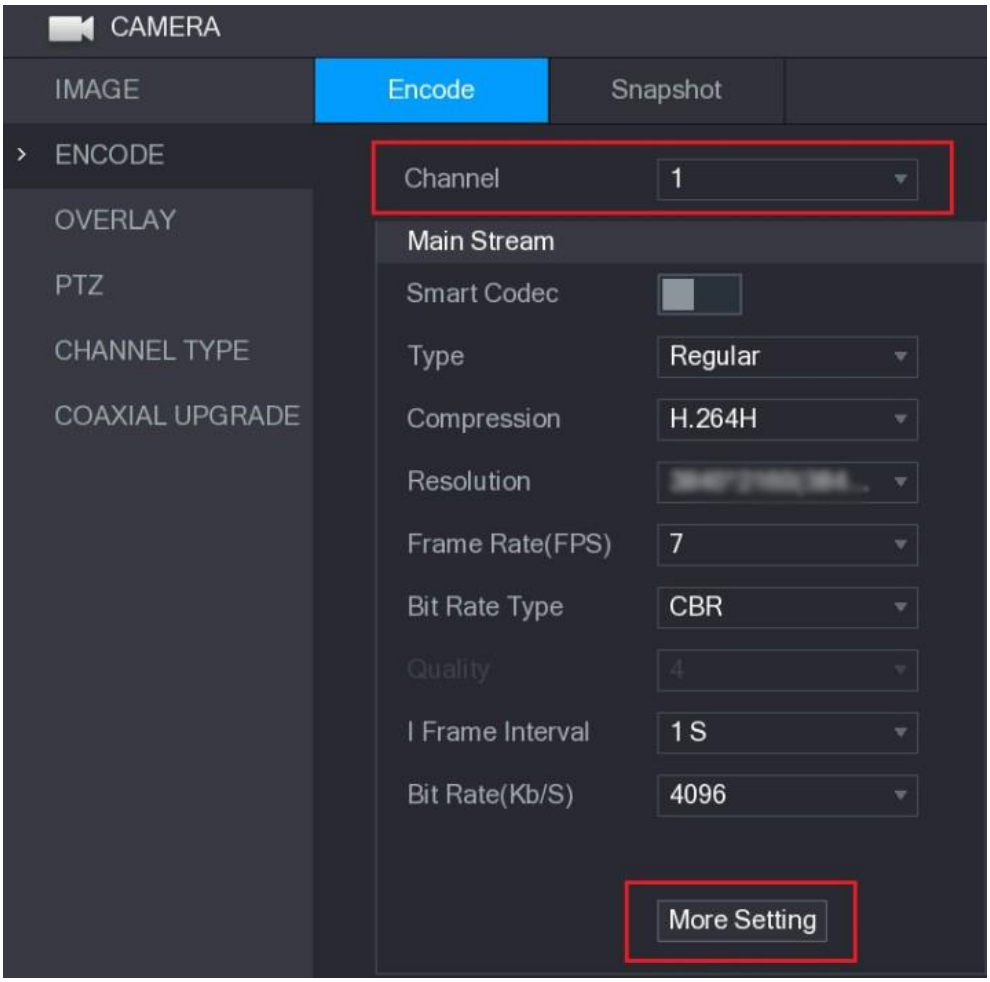

Figure 4-3

Step 2 In the **Channel** list, select the camera that you want to configure according to the coaxial port number.

Step 3 In the Main Stream column, click **More Setting**.

The **More Setting** interface is displayed. See Figure 4-4.

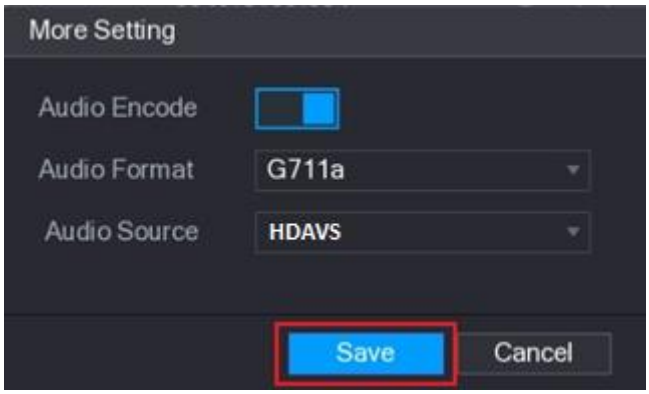

Figure 4-4

Step 4 In the **More Setting** interface, you can configure the audio settings.

- Enable **Audio Encode** function.
- In the **Audio Format** list, leave to the default.
- In the **Audio Source** list, select **HDAVS**.

Step 5 Click **Save** to save the settings.

The Encode setting interface is displayed.

Step 6 In the Encode setting interface (Figure 4-3), click **Apply**.

4.3 Operating OSD Menu

Step 1 In the live view screen interface, right-click within the live view window of the camera that you want to configure.
The shortcut menu (Figure 4-1) is displayed.

Step 2 Click **PTZ**.
The PTZ setting interface is displayed. See Figure 4-5.

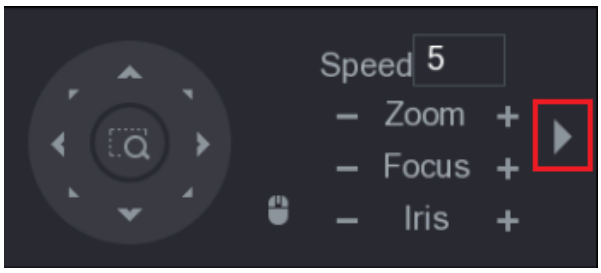

Figure 4-5

Step 3 Click to see more options. See Figure 4-6.

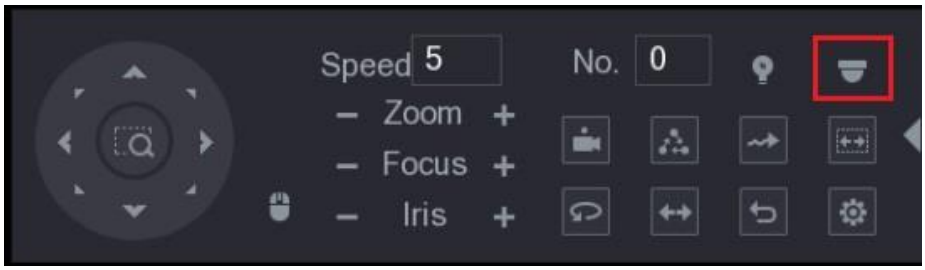

Figure 4-6

Step 4 Click .
The **MENU OPERATION** panel is displayed. See Figure 4-7.
The OSD menu of the corresponding camera is displayed on the live view screen.

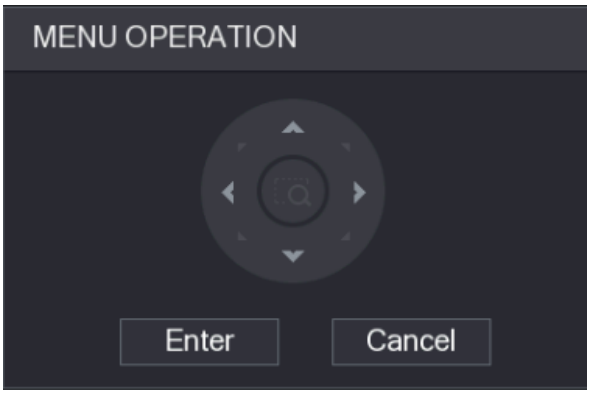

Figure 4-7

For the function of the buttons in the MENU OPERATION panel, see Table 4-1.

Button	Function	Button	Function
Enter	Enter or confirm an item	▲, ▼	Select item
Cancel	Exit OSD menu	◀, ▶	Change item value

Table 4-1

If there is "↵" as the value of an OSD item, click **Enter** to go to the next level of this item. Click **Return** to go back to the previous level. Clicking **Cancel** is to exit OSD menu without saving the modifications.

NOTE

- Interfaces of different HAVR might vary, and the actual product shall prevail.
- The OSD menus of different cameras might vary, and the actual product shall prevail.

5 Maintenance

CAUTION

In order to maintain the image quality and proper functioning of the device, please read the following maintenance instructions carefully and hold rigid adherence.

Disassembly and Desiccant Replacement

- Carefully follow the instructions in the manual when performing any disassembly operation about the device; otherwise, it might cause water leakage or poor image quality due to unprofessional disassemble.
- Please contact after-sale service for desiccant replacement if there is condensed fog found on the lens after unpacking or when the desiccant turns green. (Not all models are included with the desiccant).

Maintaining Lens and Mirror Surface

- The lens and mirror surface are covered with antireflection coating, which could be contaminated or damaged and result in lens scratches or haze image when being touched with dust, grease, fingerprints and other similar substances.
- Do not touch the image sensor directly (CCD or CMOS). Dust and dirt could be removed with air blower, or you can wipe the lens gently with soft cloth that moistened with alcohol.

Maintaining Device Body

- Device body can be cleaned with soft dry cloth, which can also be used to remove stubborn stains when moistened with mild detergent.
- To avoid possible damage on device body coating which could cause performance decrease, do not use volatile solvent such as alcohol, benzene, diluent and so on to clean the device body, nor can strong, abrasive detergent be used.