# HD AVS Camera

## User's Manual

V1.0.2

# Foreword

## General

This manual introduces the functions and operations of the HDCVI camera (hereinafter referred to as "the device"). Read carefully before using the device, and keep the manual safe for future reference.

## Safety Instructions

The following categorized signal words with defined meaning might appear in the manual.

| Signal Words | Meaning |
|---|---|
| **DANGER** | Indicates a high potential hazard which, if not avoided, will result in death or serious injury. |
| **WARNING** | Indicates a medium or low potential hazard which, if not avoided, could result in slight or moderate injury. |
| **CAUTION** | Indicates a potential risk which, if not avoided, could result in property damage, data loss, reductions in performance, or unpredictable results. |
| **TIPS** | Provides methods to help you solve a problem or save time. |
| **NOTE** | Provides additional information as a supplement to the text. |

## Revision History

| Version | Revision Content | Release Time |
|---|---|---|
| V1.0.2 | • Added "5 Smart Dual Illuminators Cameras Configuration".<br>• Added "7.4 Configuring Smart Dual Illuminators Active Deterrence Camera". | August 2022 |
| V1.0.1 | • Adjusted the format of tables.<br>• Added Cybersecurity Recommendations. | August 2021 |
| V1.0.0 | First release. | June 2020 |

## Privacy Protection Notice

As the device user or data controller, you might collect the personal data of others such as their face, fingerprints, and license plate number. You need to be in compliance with your local privacy protection laws and regulations to protect the legitimate rights and interests of other people by implementing measures which include but are not limited: Providing clear and visible identification to inform people of the existence of the surveillance area and provide required contact information.

## About the Manual

- The manual is for reference only. Slight differences might be found between the manual and the product.
- We are not liable for losses incurred due to operating the product in ways that are not in compliance with the manual.
- The manual will be updated according to the latest laws and regulations of related jurisdictions. For detailed information, see the paper user's manual, use our CD-ROM, scan the QR code or visit our official website. The manual is for reference only. Slight differences might be found between the electronic version and the paper version.
- All designs and software are subject to change without prior written notice. Product updates might result in some differences appearing between the actual product and the manual. Please contact customer service for the latest program and supplementary documentation.
- There might be errors in the print or deviations in the description of the functions, operations and technical data. If there is any doubt or dispute, we reserve the right of final explanation.
- Upgrade the reader software or try other mainstream reader software if the manual (in PDF format) cannot be opened.
- All trademarks, registered trademarks and company names in the manual are properties of their respective owners.
- Please visit our website, contact the supplier or customer service if any problems occur while using the device.
- If there is any uncertainty or controversy, we reserve the right of final explanation.

# Important Safeguards and Warnings

## Electrical Safety

- All installation and operation should conform to your local electrical safety codes.
- The power supply must conform to the requirements of ES1 in IEC 62368-1 standard and be no higher than PS2. Note that the power supply requirements are subject to the device label.
- A readily accessible disconnect device shall be incorporated in the building installation wiring.
- Make sure that the power adapter meets the device operating voltage requirement before powering up the device (The material and length of the power cable might influence the device voltage).
- Prevent the power cable from being trampled or pressed, especially the plug, power socket and the junction extruded from the device.
- We assume no liability or responsibility for all the fires or electrical shock caused by improper handling or installation.

## Operating Requirements

- Do not aim the device at strong light to focus, such as lamp light and sun light.
- Transport, use and store the device within the range of allowed humidity and temperature.
- Keep the device away from water or other liquid to avoid damages to the internal components.
- Keep sound ventilation to avoid heat accumulation.
- Heavy stress, violent vibration or water splash are not allowed during transportation, storage and installation.
- Pack the device with standard factory packaging or the equivalent material when transporting the device.
- You are recommended to use the device together with lightning arrester to improve lightning protection effect.
- You are recommended to ground the device to enhance reliability.
- You are recommended to use qualified video transmission cable to improve video quality, and use RG59 coaxial cable or higher standard.

## ⚠ WARNING

- Use standard components or accessories provided by the manufacturer and make sure that the device is installed and maintained by professional engineers.
- The surface of the image sensor should not be exposed to laser beam radiation in an environment where a laser beam device is used.
- Do not provide two or more power supply sources for the device; otherwise it might damage the device.
- If PoC power supply is used, do not connect any other device between the device and PoC transceiver including UTC, Balun, optical transceiver, distributor and convertor and so on; otherwise, the device might get burned.
- PoC supply voltage is up to 52V. Do not dismantle the device during normal operation; otherwise it might cause danger to both device and users due to high voltage.

# Table of Contents

**Foreword** ..... I
**Important Safeguards and Warnings** ..... III
**1 Overview** ..... 1
1.1 Introduction ..... 1
1.2 Application ..... 1
1.3 Transmission Distance ..... 2
**2 Cable Connection** ..... 3
2.1 Power Output ..... 3
2.2 12 VDC Power Input Port ..... 3
2.3 24 VAC Power Input Port ..... 3
2.4 Video Output Port ..... 4
2.5 Audio Input Port ..... 4
2.6 Alarm Output Port ..... 4
2.7 DIP Switch ..... 5
2.8 HD/SD Switch Control Cable ..... 5
2.9 HDCVI Aviation Connector ..... 5
**3 General Configuration and Operation** ..... 7
3.1 Entering XVR Main Menu ..... 7
3.2 Setting Audio Input ..... 7
3.3 Operating PTZ Control Panel ..... 8
3.3.1 Operating OSD Menu ..... 8
3.3.2 Operating Auto Focus (AF) ..... 10
**4 Full-Color Camera Configuration** ..... 11
4.1 Enabling/Disabling Smart Light ..... 11
4.2 Configuring Smart Light Adjustment ..... 11
**5 Smart Dual Illuminators Cameras Configuration** ..... 12
**6 Temperature and Humidity Camera Configuration** ..... 14
6.1 Enabling/Disabling Temperature and Humidity ..... 14
6.2 Configuring Temperature Monitoring Mode ..... 14
6.3 Adjusting Temperature and Humidity Display ..... 14
6.4 Viewing Temperature and Humidity ..... 15
**7 Active Deterrence Camera Configuration** ..... 16
7.1 Detection Range of PIR Detector ..... 16
7.2 Configuring Trigger Mode ..... 16
7.3 Configuring Light Warning and Audio Alarm ..... 17
7.4 Configuring Smart Dual Illuminators Active Deterrence Camera ..... 17
**8 Gateway Camera Configuration** ..... 20
8.1 Connecting Node Devices on OSD menu ..... 20
8.2 Connecting Node Devices on XVR ..... 20
**9 Box Camera Installation** ..... 22
9.1 Lens Installation ..... 22
9.1.1 Installing Lens Type 1 ..... 22
9.1.2 Installing Lens Type 2 ..... 23
9.2 I/O Port Installation ..... 24

9.2.1 Connecting Cable ..... 24
9.2.2 Removing Cable ..... 24
9.3 Device Installation ..... 24
**10 Fisheye Camera Configuration ..... 26**
10.1 Fisheye Dewarp on the Live Interface ..... 26
10.2 Fisheye Dewarp During Playback ..... 27
**11 FAQ ..... 28**
11.1 PoC Power Supply ..... 28
11.2 Long Distance Power Supply ..... 28
11.3 Centralized Power Supply ..... 28
11.4 Connector Waterproof Protection ..... 29
**Maintenance ..... 31**
**Appendix 1 Cybersecurity Recommendations ..... 32**

# 1 Overview

## 1.1 Introduction

The devices comply with the HDCVI standard and support the transmission of video and control signal over coaxial cable. The devices produce video signal with megapixel resolution and require connected XVRs to achieve high-speed, long-distance, and zero-lag transmission of the signal. They are applicable to various scenes, such as roads, warehouses, underground parking lots, bars, pipelines, and gas stations.

## 1.2 Application

Figure 1-1 Application scenario

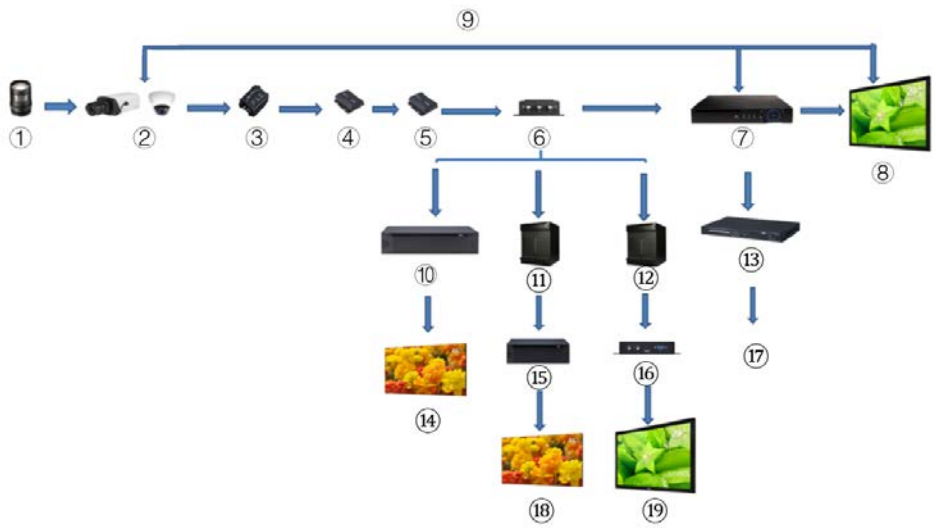


Table 1-1 Description of the application

| No. | Name | No. | Name | No. | Name |
|---|---|---|---|---|---|
| 1 | (Optional) Lens | 8 | Display Screen | 15 | Splicer |
| 2 | HDCVI Products | 9 | Direct Connection | 16 | Convertor |
| 3 | (Optional) Surge Protection Device | 10 | Integrated Video Platform | 17 | Ethernet |
| 4 | (Optional) Optical Transceiver (Send) | 11 | Matrix | 18 | Splicing Screen |
| 5 | (Optional) Optical Transceiver (Receive) | 12 | Matrix | 19 | Display Screen |
| 6 | (Optional) Distributor | 13 | Switch | — | — |
| 7 | HCVR Products | 14 | Splicing Screen | — | — |

## 1.3 Transmission Distance

Table 1-2 Transmission distance

| Cable | | 720P | 1080P | 4MP/4K |
|---|---|---|---|---|
| Coaxial Cable | RG6 (75-5) | 1200 m | 800 m | 700 m |
| | RG59 (75-3) | 800 m | 500 m | 500 m |
| UTP | CAT6 | 450 m | 300 m | 300 m |

Table 1-3 Transmission distance of PoC HDCVI powered by PoC XVR

| PoC XVR Series | PoC Mode | RG59 | RG6 |
|---|---|---|---|
| Full series | AT | 100 m | 100 m |
| | AF | 200 m | 200 m |

# 2 Cable Connection

Cable types might vary with different cameras, and the actual product shall prevail.

## 2.1 Power Output

Supplies 12 VDC power.

- Ensure that power consumption of devices connected to this port is below 2 W.
- Ensure that supply frequency of devices connected to this port is higher than 1 MHz, such as sound pick-up, temperature/humidity sensor and other devices without power consumption change. It might cause image flickering if this port is connected to devices with supply frequency less than 1 MHz, such as fan, hall sensor, loudspeaker, motor and other electromechanical devices with power consumption change.

Figure 2-1 Power output

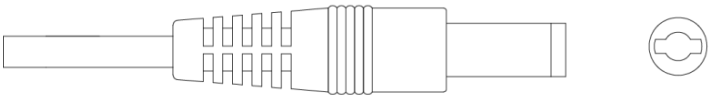

## 2.2 12 VDC Power Input Port

Inputs 12 VDC power.

Device abnormity or damage could occur if power is not supplied correctly for 12 VDC power input port. Be sure to supply power as instructed in the manual.

Figure 2-2 12 VDC power input port

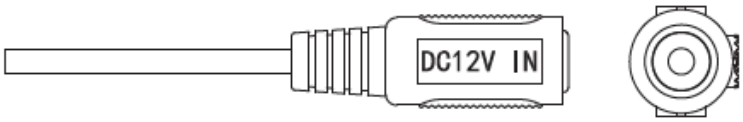


## 2.3 24 VAC Power Input Port

Inputs 24 VAC power.

Device abnormity or damage could occur if power is not supplied correctly. Please be sure to supply

power as instructed in the manual.

Figure 2-3 24 VAC power input port

## 2.4 Video Output Port

Connects to the XVR to output video signal.

**WARNING**

- When the device is in the condition of PoC power supply, do not connect any other device between the device and PoC XVR or PoC transceiver including UTC, Balun, optical transceiver, distributor and convertor and so on; otherwise, the device might get burned.
- PoC power supply is with high voltage. Do not dismantle the device during normal operation; otherwise it might cause danger to both device and users due to high voltage.

Figure 2-4 Video output port

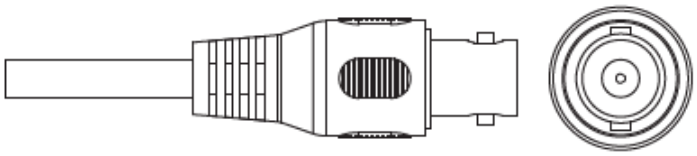

## 2.5 Audio Input Port

Connects to sound pickup devices to receive analog audio signal.

Figure 2-5 Audio input port

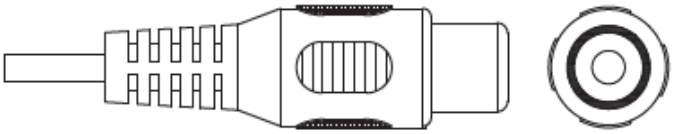

## 2.6 Alarm Output Port

Connects to external alarm devices such as siren to trigger alarms.

Figure 2-6 Alarm output port

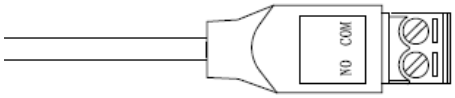

## 2.7 DIP Switch

Dial switches to change output mode. Switch up indicates "ON", and switch down indicates "OFF."

Figure 2-7 DIP switch

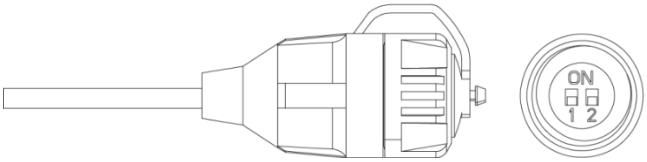


Table 2-1 Operations of DIP switch

| Switch1 | Switch2 | Output Mode |
|---|---|---|
| OFF | OFF | AVS |
| ON | ON | CVBS |
| ON | OFF | AHD |
| OFF | ON | TVI |

## 2.8 HD/SD Switch Control Cable

When the HD/SD switch control cable forms a short circuit, video output mode switches from HD to SD. On the contrary, it will switch back to HD video output when the cable forms an open circuit.

Figure 2-8 HD/SD switch control cable

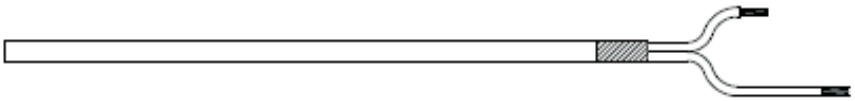

The HD/SD switch control cable is available on select models.

## 2.9 HDCVI Aviation Connector

Aviation connector could strengthen the connection of mobile devices and provide four ports for your convenience.

Figure 2-9 HDCVI aviation connector

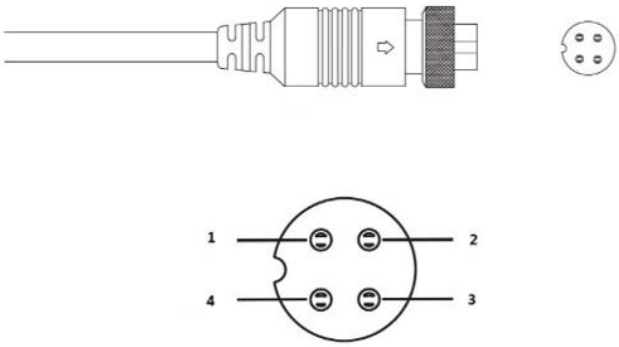

Table 2-2 HDCVI aviation connector components

| No. | Name | No. | Name |
|---|---|---|---|
| 1 | (Yellow): Video | 3 | (White): Video Ground |
| 2 | (Black): Power Ground | 4 | (Red): Power |

# 3 General Configuration and Operation

Power up the device and connect it to the XVR with coaxial cable, and then the live interface is displayed. Then you can start configuring HDCVI cameras on the XVR.

- The No. of the coaxial ports on XVR will display at the lower-left corner of each window to indicate the corresponding camera.
- Ports might vary depending on the XVR models, and the actual product shall prevail.

## 3.1 Entering XVR Main Menu

Step 1 Right-click on the live interface, and the shortcut menu is displayed.

Step 2 Click **Main Menu** and then log in to the system. The main menu of XVR is displayed.

Figure 3-1 XVR main menu

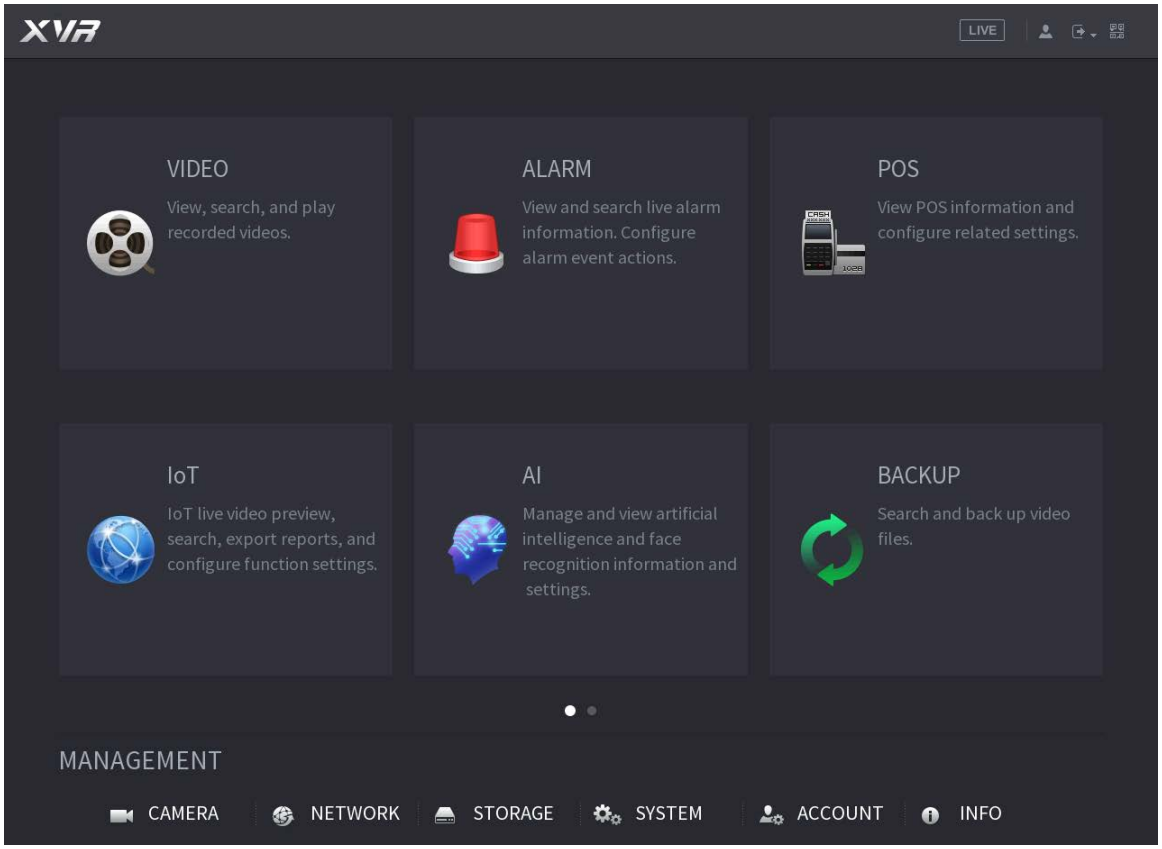


## 3.2 Setting Audio Input

Audio input is available on select models.

Step 1 On the **Main Menu** interface, select **CAMERA > ENCODE > Encode**.

Step 2 On the **Channel I** drop-down list, select the device that you want to configure according to the coaxial port No.

Step 3 Under Main Stream, click More Setting.

Figure 3-2 Encode setting

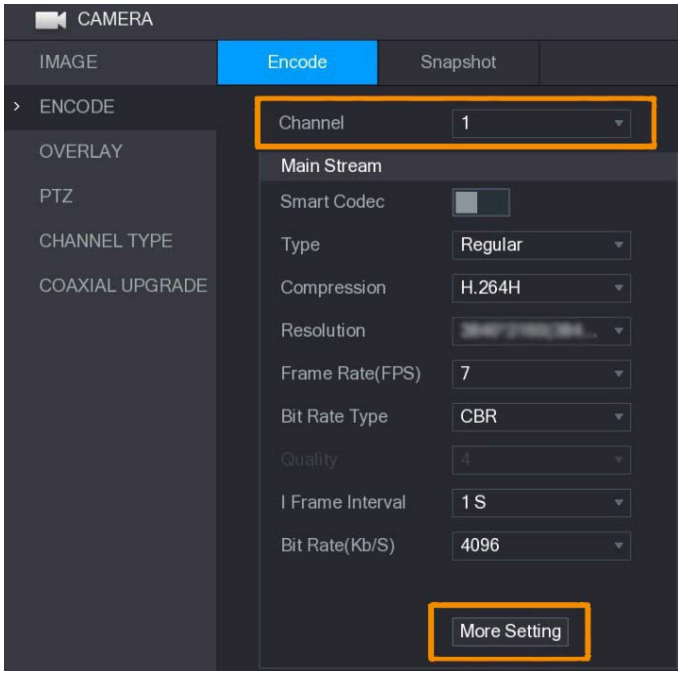


Step 4 On the **More Setting** interface, enable **Audio Encode** function and then configure the audio settings. In the **Audio Format** list, leave it as default; in the **Audio Source** list, select **HDCVI**.

Step 5 Click **Save**.

Figure 3-3 More setting

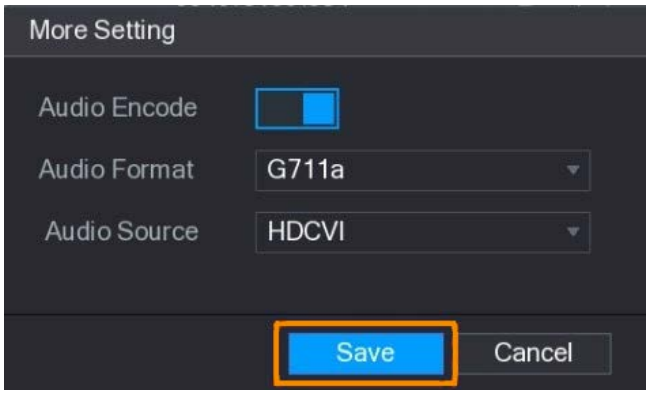


Step 6 On the **Encode** interface, click **Apply**.

# 3.3 Operating PTZ Control Panel

## 3.3.1 Operating OSD Menu

- The OSD menus of different cameras might vary, and the actual product shall prevail.
- When you use OSD menu to restore the device to default settings, the resolution, mode, frame rate and language of the device will not be restored.

Step 1 On the live interface, right-click the device that you want to configure. The shortcut menu is

displayed.

Figure 3-4 Shortcut menu

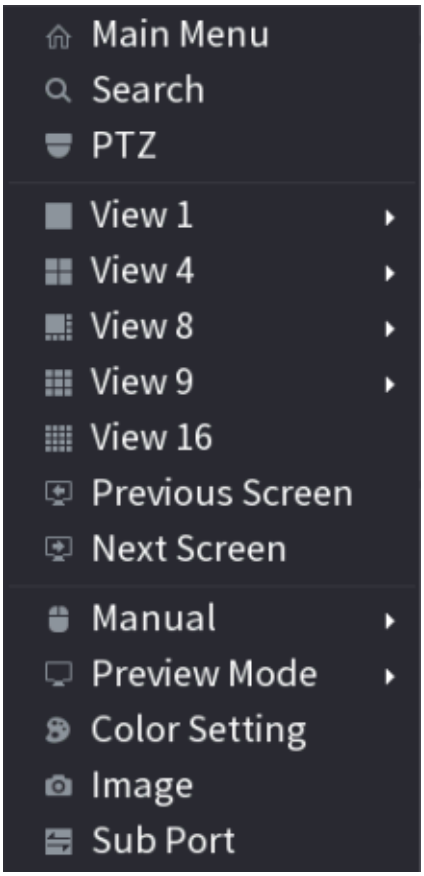


Step 2 Click **PTZ** and click to extend the menu.

Figure 3-5 PTZ setting options

Step 3 Click . The **MENU OPERATION** panel is displayed.

Figure 3-6 Menu Operation panel

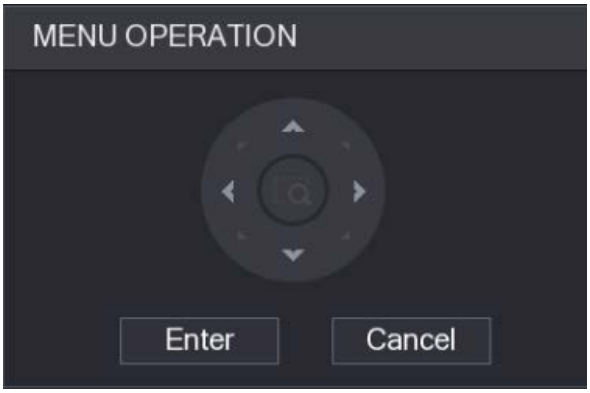

Table 3-1 Menu operation panel function

| Button | Function | Button | Function |
|---|---|---|---|
| Enter | Enter or confirm an item | , | Select item |
| Cancel | Exit OSD menu | , | Change item value |

The OSD menu of the corresponding device is displayed on the live interface. If the value of OSD item is " ↵ ", click **Enter** to go to the next level of this item. Click **Return** to go back to the previous level. Click **Cancel** to exit OSD menu without saving the modifications.

Figure 3-7 OSD menu

## 3.3.2 Operating Auto Focus (AF)

Table 3-2 Parameter of AF

| Parameter | Description |
|---|---|
| Zoom | : Zoom out.<br>: Zoom in. |
| Focus | : Focus far.<br>: Focus near. |
| Iris | : Auto focus.<br>: Open OSD menu. |
| PTZ movement | Supports eight directions. |
| | Click , and then you can control the four directions (left, right, up, and down) of PTZ through mouse operation. |
| | Click to unfold PTZ control panel. |

# 4 Full-Color Camera Configuration

This chapter introduces how to configure the working modes of smart light, including auto and manual. Smart light will change the brightness of white light automatically according to the ambient lighting condition to avoid over-exposure. Smart light is only available for full-color camera.

## 4.1 Enabling/Disabling Smart Light

Smart light is enabled by default. To switch the mode of smart light, enter OSD menu (Figure 3-7) and select **Light > Smart Light**.

## 4.2 Configuring Smart Light Adjustment

In the smart light mode, configure the maximum brightness level of the smart light, and the device will change brightness automatically according to the ambient lighting condition. You can also configure the sensitivity of the smart light.

### Configuring Brightness Level

Step 1 On the OSD menu, select **Light > Smart Light > Level**.

Step 2 Select from **1** to **5** to configure the maximum brightness level.

The maximum brightness level is 5 by default.

Step 3 Click **Return** and then **Exit** to exit the configuration.

You can also configure the brightness level manually in **Light > Manual > Level**.

### Configuring Sensitivity

Step 1 Select **Light** > **Smart Light** > **Sensitivity**.

Step 2 Select from **1** to **5** to configure the sensitivity value of the smart light.

- The higher the value is, the easier the smart light will be woken up.
- The sensitivity value is 3 by default.

Step 3 Click **Return** and then **Exit** to exit the configuration.

# 5 Smart Dual Illuminators Cameras Configuration

Smart dual illuminators camera supports three light modes: **Smart IR&WL**, **WL mode**, **IR mode**.

On the OSD menu, select Illuminator, and then view the three different modes.

- **Smart IR&WL**: Turn on the IR light in low ambient brightness. If iMD or IVS has been associated with smart dual illuminators cameras, and when the iMD detects people and vehicles on the screen, or perimeter rules are triggered by the IVS, then the camera will be controlled to turn on the warm light, and the screen automatically switch to the full-color. When iMD or IVS has detected that no rules are triggered by people and vehicles, the camera will turn off the warm light and turn on the IR light to switch to the black & white night vision.
- **WL mode**: If the screen is full-color in low ambient brightness, then the camera is a full-color camera.
- **IR mode**: If the screen is black & white in low ambient brightness, then the camera is an IR camera.

Figure 4-1 Smart IR&WL

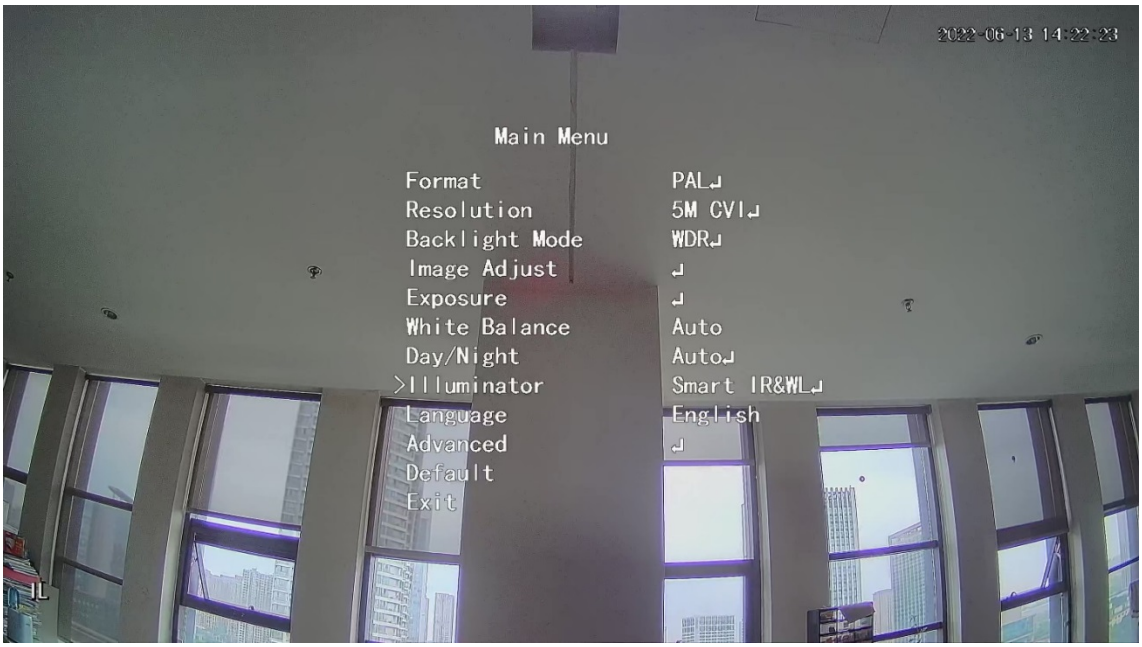

Figure 4-2 WL mode

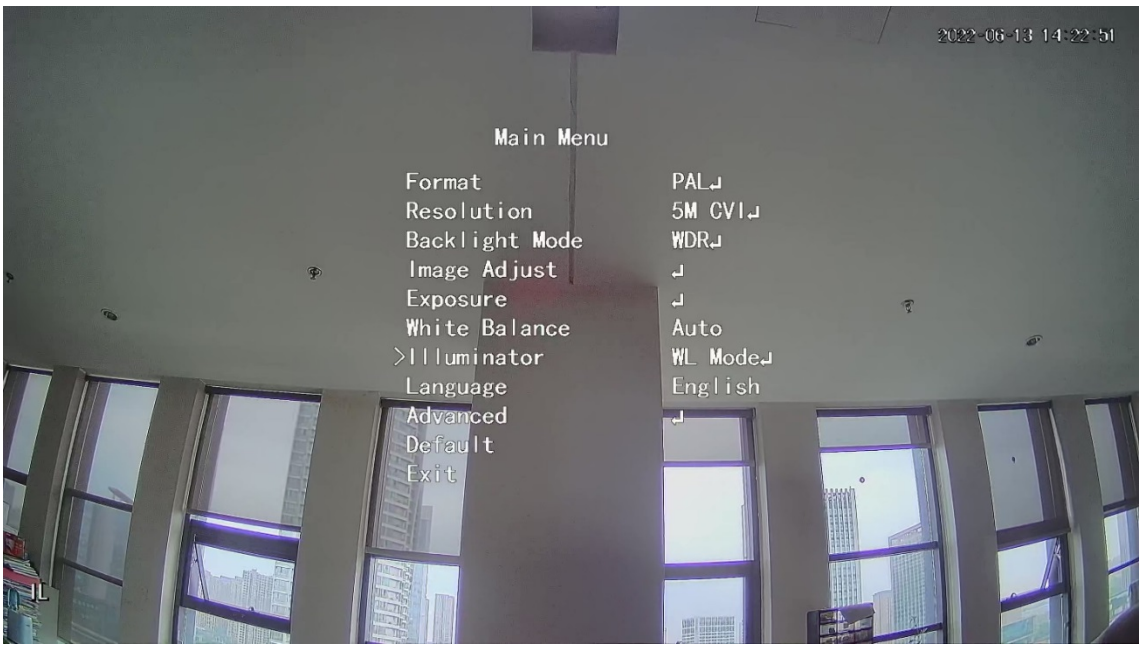


Figure 4-3 IR mode

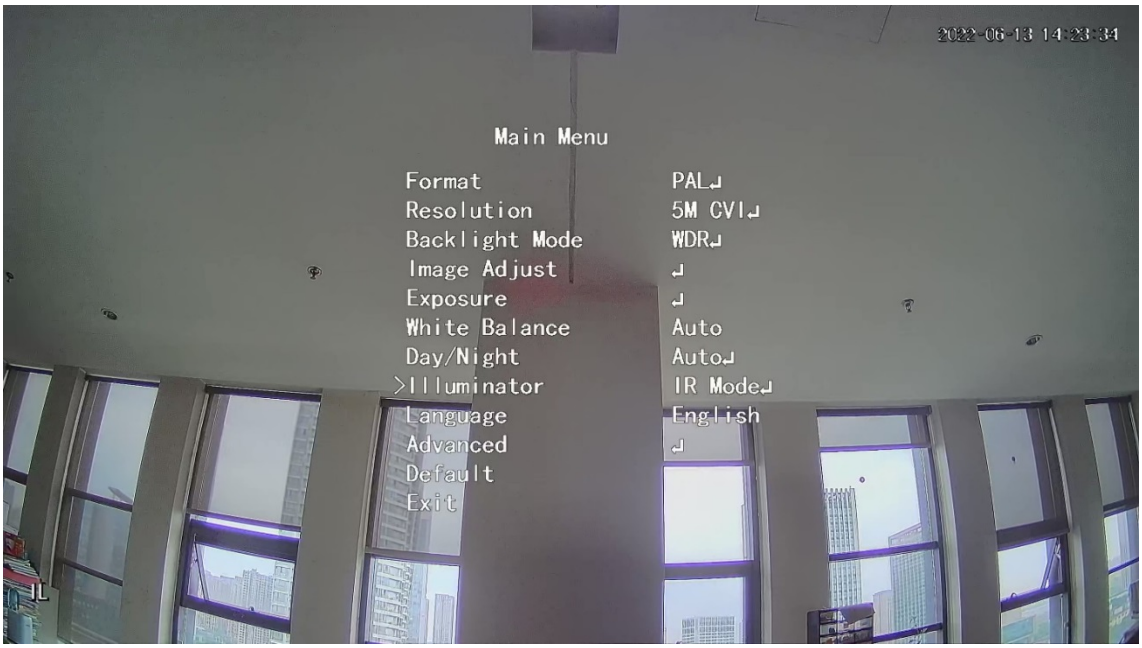

# 6 Temperature and Humidity Camera Configuration

Temperature and humidity camera can measure the ambient temperature and humidity and display the value on the live interface.

## 6.1 Enabling/Disabling Temperature and Humidity

On the OSD menu (Figure 3-7), select **Advanced > Temp. & Humidity** to enable and disable the function. You can view real-time temperature and humidity in the image.

## 6.2 Configuring Temperature Monitoring Mode

The temperature and humidity camera supports temperature correction under strong light outdoors. You can change the temperature monitoring mode.

Step 1 Enable **Temp. & Humidity**.

Step 2 Select **Standard** or **Sunlight** in the **Measure Mode** to change the temperature monitoring mode. **Standard** is set by default.

You are recommended to change the mode into **Standard** or **Sunlight** when the camera is used indoors or outdoors respectively.

## 6.3 Adjusting Temperature and Humidity Display

Step 1 Select **Advanced** > **Temperature & Humidity** > **Location** on the OSD menu.

Make sure that the temperature and humidity function is enabled.

Step 2 Click the direction buttons on the PTZ menu to change the display location.

Step 3 Click **Enter** to save the configuration.

Figure 6-1 Adjust temperature and humidity display

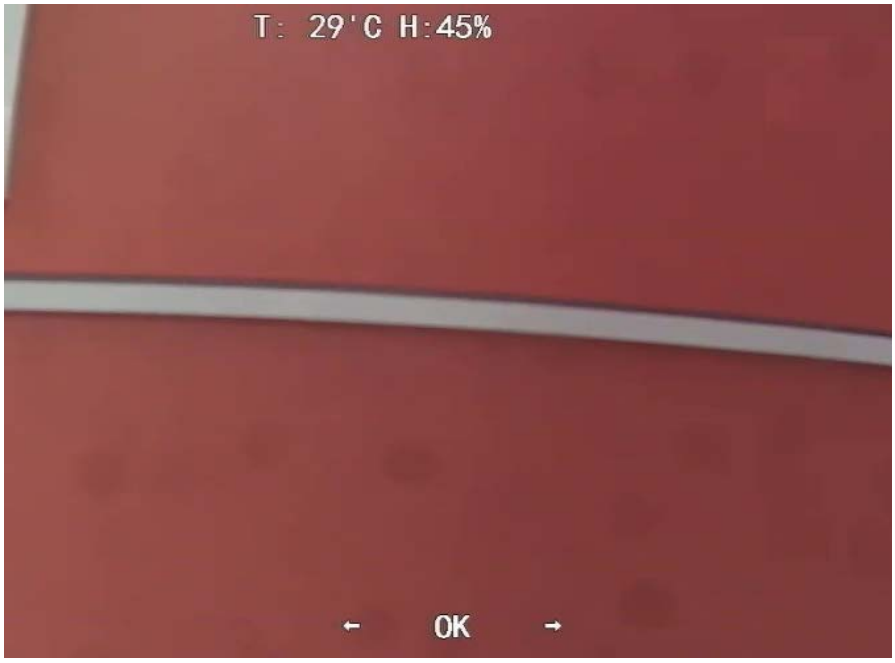


Right-click anywhere on the monitoring image to return to the previous interface after all the settings are completed.

## 6.4 Viewing Temperature and Humidity

Step 1 Right-click on the live interface to enter XVR main menu (Figure 3-1).

Step 2 Select **IoT > REALTIME DISPLAY**, and then you can view the real-time temperature and humidity.

Figure 6-2 View temperature and humidity

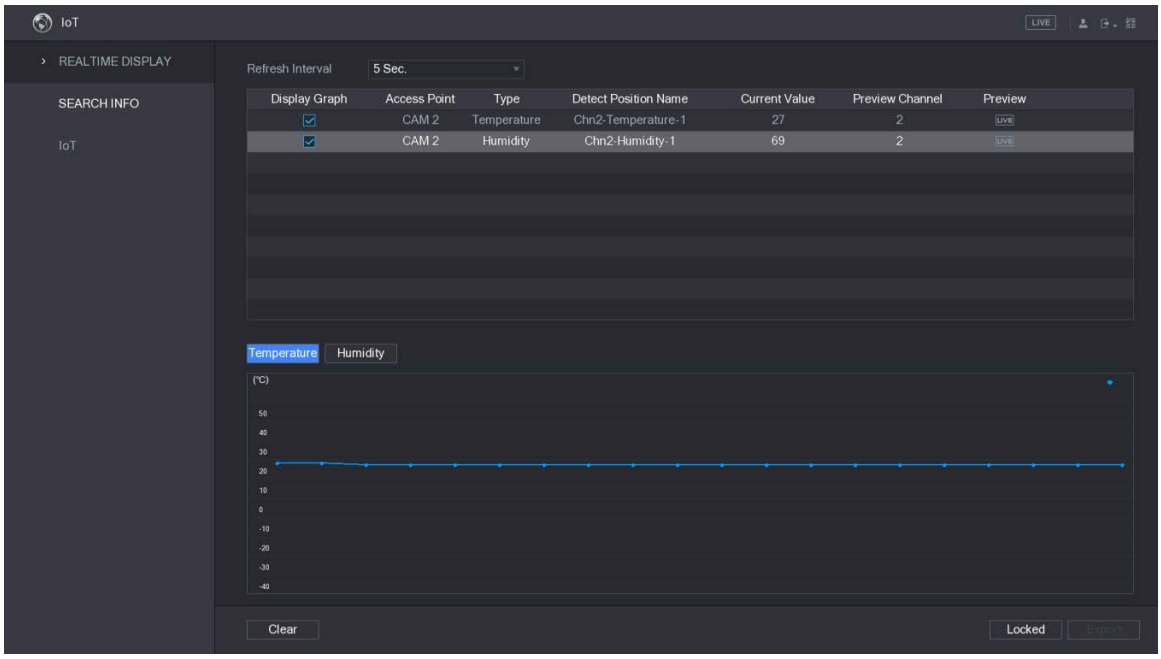


For details, see XVR user's manual.

# 7 Active Deterrence Camera Configuration

Active deterrence camera can warn off intruders actively with LED even before users are aware of the incident. Once an intrusion is detected, the LED will be turned on to alert the intruder.

## 7.1 Detection Range of PIR Detector

The horizontal detection range of the sensor is 100° or 110°.

Figure 7-1 Horizontal detection range

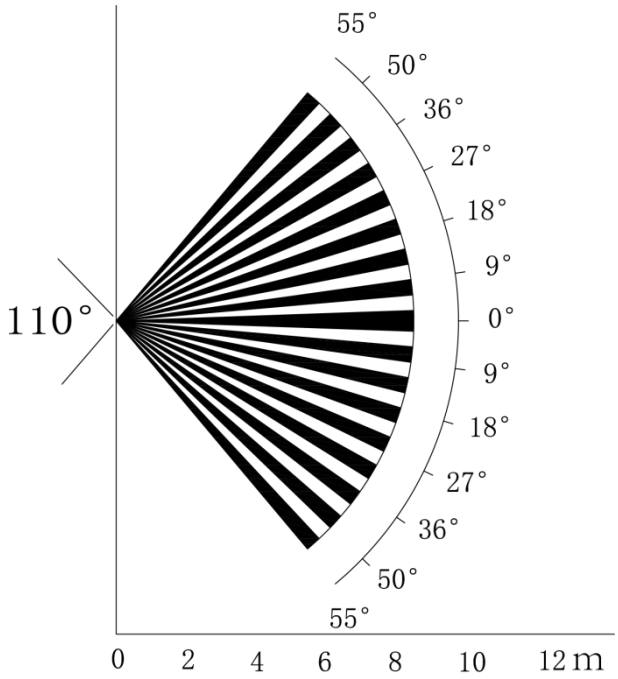


The vertical detection distance of the sensor is 2 m–10 m, 1 m–14 m or 1 m–12 m.

Figure 7-2 Vertical detection distance

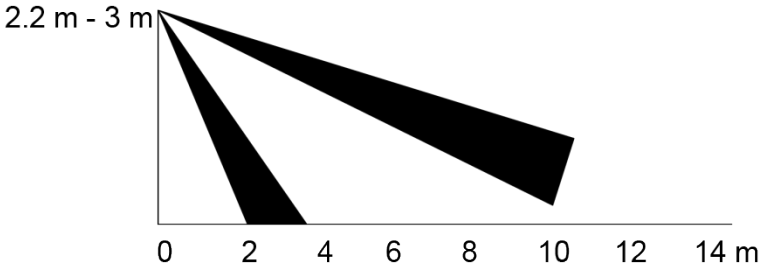


## 7.2 Configuring Trigger Mode

On the OSD menu (Figure 3-7), select **Alert > Trigger Mode**.

If you select **Camera Set**, the sound and light alarm will be triggered in the device.

If you select **XVR Set**, the sound and light alarm will be triggered in the XVR.

For more information about **XVR Set**, see user's manual of XVR.

## 7.3 Configuring Light Warning and Audio Alarm

This function is available only when the trigger mode is set to **Camera Set**.

- On the OSD menu (Figure 3-7), select **Alert**. Set **Light Warning** to **ON**, and then enter the item.
  - ◇ For **Mode**, You can select from **Lighting** to **Flash**.
  - ◇ If you select **Flash**, you can set the **Flash Frequency** to **Low**, **Medium** or **High**.
  - ◇ For **Alert Duration**, you can adjust from 5 seconds to 60 seconds.
- On the Audio Alert item, set it to ON, and then enter the item.
  - ◇ In the **Audio** item, you can select from three audios.

    You can contact after-sales support to customize alarm audios.
  - ◇ In the **Volume** item, you can select from **Low**, **Medium** and **High**.
  - ◇ In the **Alert Duration**, you can adjust from 5 seconds to 60 seconds.

## 7.4 Configuring Smart Dual Illuminators Active Deterrence Camera

For details on configuring smart dual illuminators, see "5 Smart Dual Illuminators Cameras Configuration".

Step 1 Select **Main Menu** > **Alert**, and then set **Audio Alert** to **ON**.

Step 2 Set the **Volume** and **Alert Duration**.

The shortest of alert duration is 5 s, and the longest is 60 s.

Step 3 Select 5 different audio clips (including **Alarm**, **No parking here**, **Private land no entry**, **Warning zone keep off**, and **Welcome**).

You can also DIY the first clip to a .bin file and import to the back-end to use.

Figure 7-3 Main menu

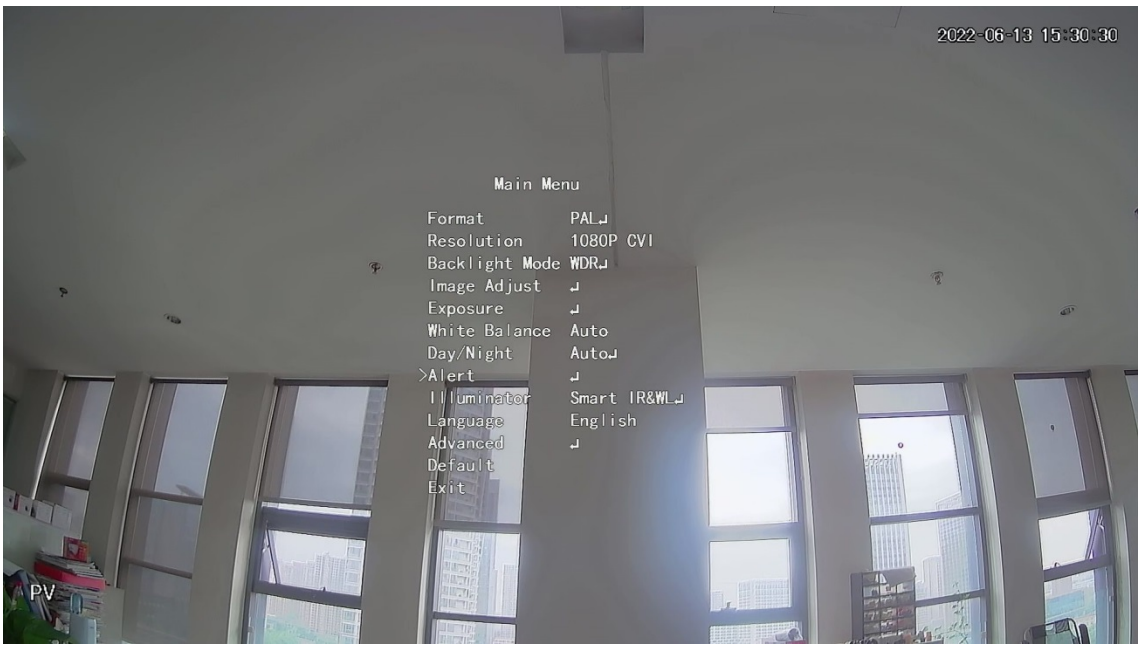


Figure 7-4 Alert

Figure 7-5 Audio alert

Step 4 Select **Main Menu** > **Alert**, and then set **Light Warning** to **ON**.

Step 5 Set the **Flash Freq** and **Alert Duration**.

The shortest of alert duration is 5 s, and the longest is 60 s.

Figure 7-6 Light warning

# 8 Gateway Camera Configuration

This function is available on select models.

This series of devices can serve as a gateway to connect compatible wireless node devices, including door/window contact, siren, and PIR detector to XVR to form a local alarm network. Once any alarm from devices within the network is triggered, the device transmits alarm signal as configured.

Figure 7-7 Network diagram

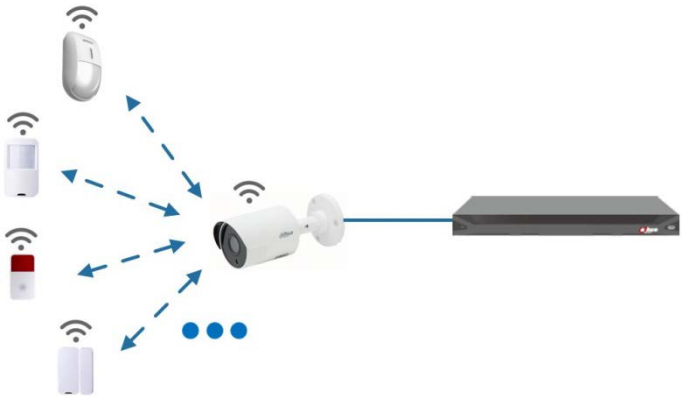

Connect the wireless node devices to XVR with gateway camera and then configure parameters.

For more detailed configuration, see user's manual of XVR or node device.

## 8.1 Connecting Node Devices on OSD menu

Step 1 On the OSD menu (Figure 3-7), select **Advanced**.

Step 1 Set **Enroll** to **ON**, and the device enters pairing mode.

Operate the node device and enter pairing mode according to corresponding manual.

Step 2 After pairing is completed, you can check the information of the connected device on the **Sensor Pairing** interface.

## 8.2 Connecting Node Devices on XVR

Step 1 On the XVR Main Menu (Figure 3-1), select **IoT > MANAGER > Sensor Pairing**.

Step 2 Click **Add**.

Figure 8-1 Add sensor pairing (1)

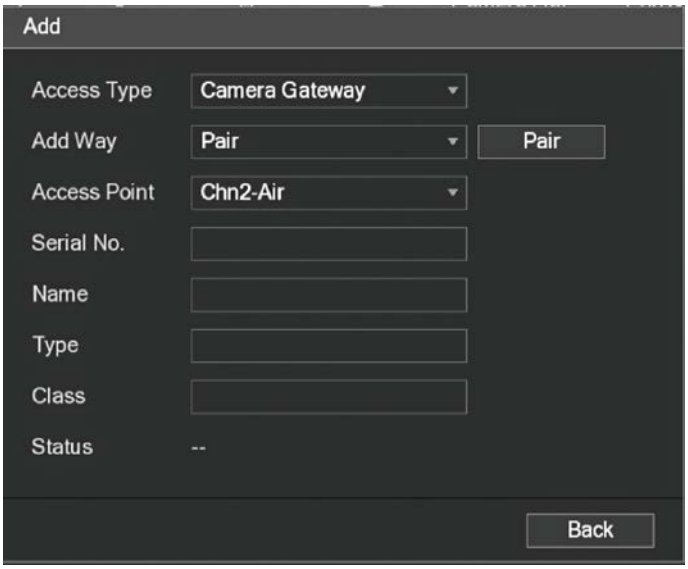


Step 3 In the **Access Type** list, select **Camera Gateway**.

Step 4 Click **Pair**, and the device enters pairing mode.

Operate the node device and enter pairing mode.

Figure 8-2 Add sensor pairing (2)

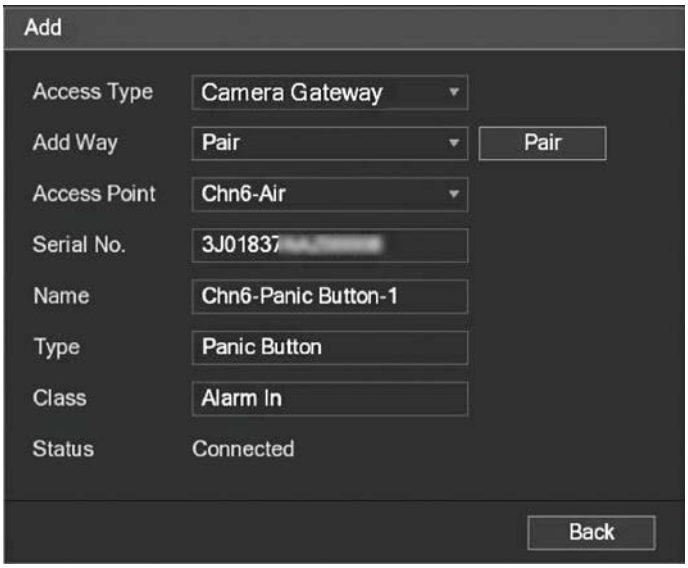


Step 5 Click **Back**.

Click to modify the device name; click to delete node device.

Figure 8-3 Connected device

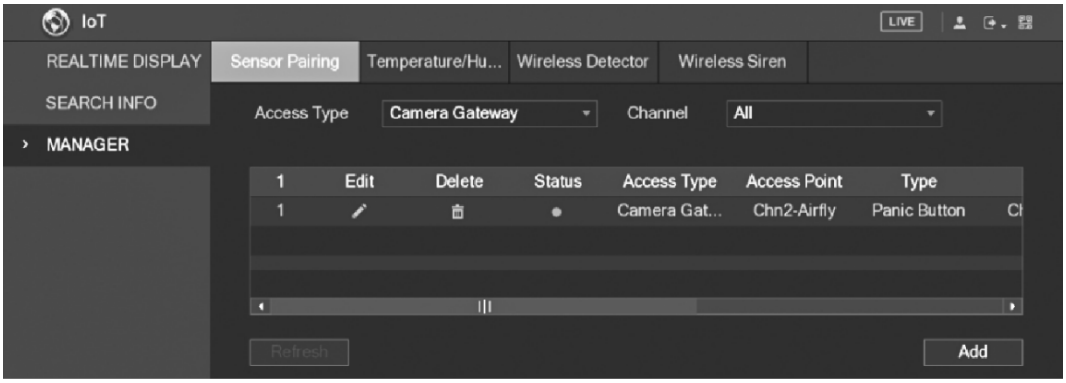

# 9 Box Camera Installation

- The device is not equipped with lens when it is delivered out of factory and you need to install lens.
- Do not remove the electrostatic adsorption film on the surface of transparent cover before installation and debugging are completed, which is to avoid damage during installation.
- Install the lens onto the device in time after unpacking, which is to avoid the device module being exposed in humid environment for a long time.
- The mounting surface shall be thick enough to sustain at least 3 times of the device weight.
- Install the C/CS adapter ring to the camera if you are using C mount lens.
- The following installation figure is for reference only.

## 9.1 Lens Installation

### 9.1.1 Installing Lens Type 1

Step 1 Remove the protection cap from the device. Align the lens to the lens position of the device (Install the C/CS adapter ring to the device if you are using C mount lens).Turn clockwise to secure the lens firmly.

Step 2 Insert the socket of the lens cable into the auto iris lens connector on the side panel of the device. Skip this step if you are using auto iris lens.

Step 3 Fasten the screw near the focusing ring, and then turn anti-clockwise to move the focusing ring out to focus manually until you get clear video.

Step 4 After you completed focusing, fix the screw near the focusing ring firmly.

Step 5 Fasten the focusing ring.

Figure 9-1 Lens installation (1)

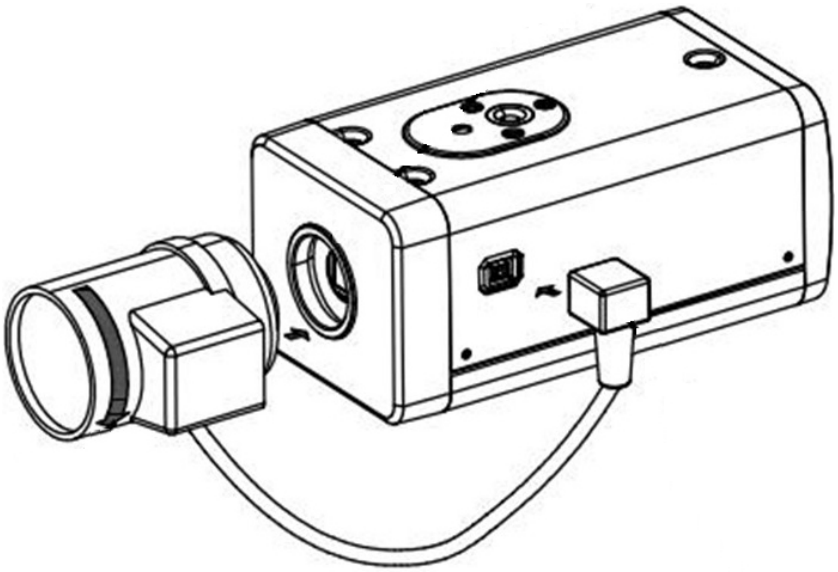

## 9.1.2 Installing Lens Type 2

Figure 9-2 Front panel

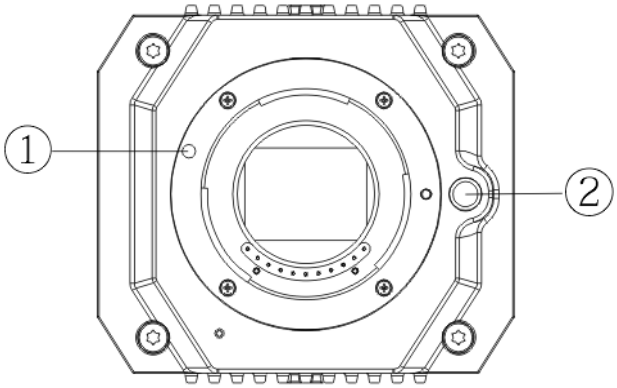


Table 9-1 Front panel components

| No. | Name | No. | Name |
|---|---|---|---|
| 1 | Red sign | 2 | Lens-dismounting button |

Step 1 Remove the protection cover on the device lens, align the red sign of the lens with the red sign ① on the device, rotate the buckle clockwise until the lens-dismounting button ② bounces upward, and then the lens is installed.

Step 2 Loosen the screw on the focusing ring, rotate the focusing ring outward to focus manually until you get clear video. Skip this step if you are using lens that supports auto focusing.

Figure 9-3 Lens installation (2)

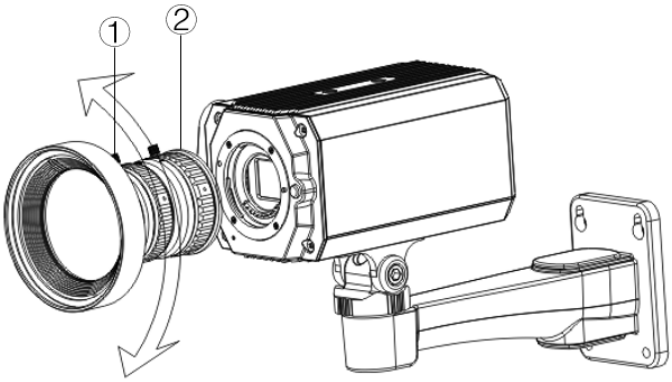


Table 9-2 Lens components

| No. | Name | No. | Name |
|---|---|---|---|
| 1 | Screw | 2 | Focusing ring |

Step 3 After focusing, tighten the screw on the focusing ring and fix the focusing ring.

To dismount the lens, press lens-dismounting button ②, rotate the lens anticlockwise, and release the bucket.

# 9.2 I/O Port Installation

## 9.2.1 Connecting Cable

Step 1 Press and hold the mini screwdriver to press the button on the hole groove of the cable to be connected.

Step 2 Insert the cable into the hole groove.

Step 3 Release the screwdriver.

Figure 9-4 Install cable

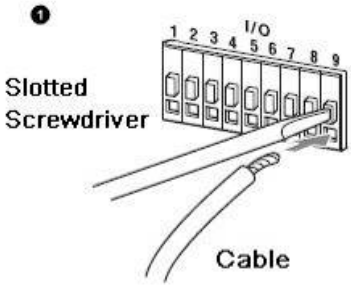


## 9.2.2 Removing Cable

Step 1 Use the mini screwdriver to press the button on the hole groove of the cable to be connected.

Step 2 Pull out the cable from the hole groove.

Step 3 Release the screwdriver.

Figure 9-5 Remove cable

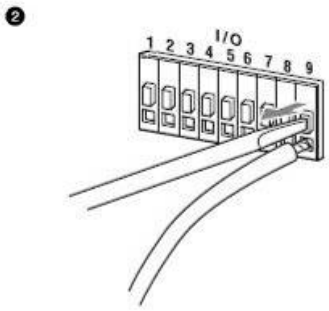


# 9.3 Device Installation

The device is delivered without mounting bracket and screw. You need to purchase them separately.

Figure 9-6 Device components

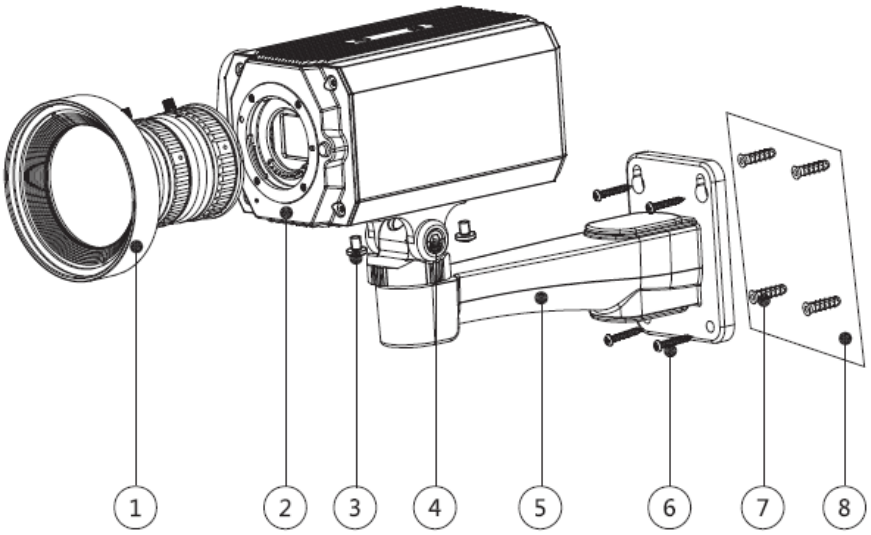


Table 9-3 Device components

| No. | Name | No. | Name |
|---|---|---|---|
| 1 | Lens | 5 | Mounting bracket |
| 2 | Front panel | 6 | Self-tapping screw |
| 3 | Fixing screw | 7 | Expansion bolt |
| 4 | Bracket adjusting screw | 8 | Mounting surface |

Step 1 Fix the mounting bracket ⑤ on the mounting surface ⑧.

1) Mark the bracket mounting hole positions on the mounting surface ⑧, drill four holes on the marked positions, insert four expansion bolts ⑦ into the mounting holes and then tighten.
2) Align the four screw holes on the bottom of the mounting bracket ⑤ with the expansion bolts, insert four self-tapping screws ⑥ and then tighten.

Step 2 Fix the device on the mounting bracket ⑤.

Align the mounting hole positions on the bottom of device casing with the mounting holes positions on the mounting bracket ⑤, and then install the device on the mounting bracket with fixing screw ③.

Step 3 Adjust camera monitoring angle.

Use a wrench to loosen the adjusting screw ④, adjust camera to the location which needs to be monitored, and then use wrench to tighten bracket adjusting screw ④ to fix the device.

Step 4 Connect the cable to the back panel of the device.

After device installation and cable connection, you can view monitoring image through storage device such as XVR.

# 10 Fisheye Camera Configuration

The fisheye camera (panoramic camera) has wide monitoring angle but its video is distorted. The dewarp function can provide the proper and vivid video suitable for human eyes. Fisheye function should be configured at XVR.

## 10.1 Fisheye Dewarp on the Live Interface

Step 1 On the XVR shortcut menu, select **Fisheye**.

Step 2 Set fisheye **Fit Mode** and **Show Mode**.

Figure 10-1 Fisheye menu

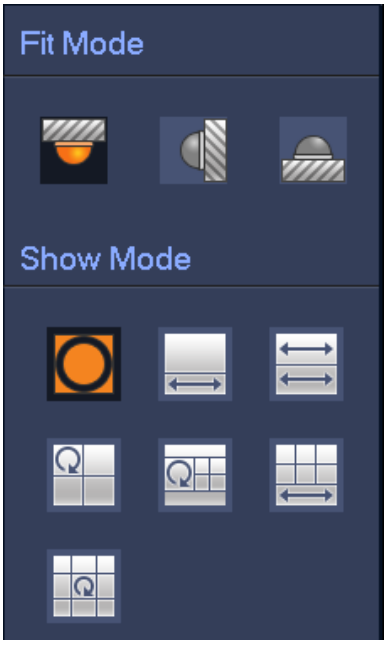


Table 10-1 Parameters of fisheye

| Fit Mode | Icon | Description |
|---|---|---|
| Ceilling mount ( ) Ground mount ( ) | | 360° panorama original window |
| | | 1 dewarp window and 1 panorama expanded window |
| | | 2 panorama expanded windows |
| | | 1 360° panorama window and 3 dewarp windows |
| | | 1 360° panorama window and 4 dewarp windows |
| | | 4 dewarp windows and 1 panorama expanded window |
| | | 1 360° panorama window and 8 dewarp windows |
| Wall mount ( ) | | 360° panorama original window |
| | | Panorama expanded window |
| | | 1 panorama unfolding window and 3 dewarp windows |
| | | 1 panorama unfolding window and 4 dewarp windows |
| | | 1 panorama unfolding window and 8 dewarp windows |

- The dewarp modes might vary for different installation modes.
- For the non-fisheye channel, a prompt is displayed to remind you that dewarp function is not supported.
- Some series products support 180° dewarp which can only be wall mounted. The actual product shall prevail.

Figure 10-2 Fisheye show mode

You can use the mouse to drag the color areas on the left original screen or the rectangular screens on the right to change the monitoring ranges. (Not supported for wall mount.)

## 10.2 Fisheye Dewarp During Playback

When playing back the fisheye recorded video, you can use dewarp function to adjust video.

Step 1 On the XVR main menu, click **SEARCH**.

Step 2 Select 1-window playback mode and corresponding fisheye channel, and then click ▶ to play.

Step 3 Right-click to go to the dewarp playback interface.

# 11 FAQ

## 11.1 PoC Power Supply

PoC HDVRs supports PoC function. No IC Realtime POC Recorder has been released as of 2023.

PoC camera can be divided into AT camera and AF camera. Power consumption of AT camera is less than 12W, and power consumption of AF camera is less than 6W.

You need to check the maximum power of PoC before use. Assuming that the maximum power of one XVR is 48W, the XVR can connect AT cameras up to 48/12=4 and AF cameras up to 48/6=8.

When the device is in the condition of PoC power supply, do not connect any other device between the device and PoC XVR or PoC transceiver such as UTC, Balun, optical transceiver, distributor and convertor and so on; otherwise, the device might get burned.

PoC power supply is with high voltage. Do not dismantle the device during normal operation; otherwise it might cause danger to both device and users due to high voltage.

## 11.2 Long Distance Power Supply

In many scenarios, our clients adopt long distance power supply, transmitting 12V DC to cameras located over 100 m. Such long distance power supply might cause problems.

Q1: Recurrent restart of devices or even ICR Failure.

Possible reasons: The long power supply cable leads to a large voltage drop on the equipment power supply cable, and turning on the IR light at night leads to a further increase of the voltage drop, resulting in restart of the device. After the device is restarted, the ICR is switched to the Day mode by default. By judging the ambient light at night, the device will operate in Night mode, and then the infrared light is turned on, which causes the device to restart again because of undervoltage. Thus, ICR is switched to every 2 seconds, impacting its switching lifespan.

Q2: Unable to restart devices at night, and black screen or restart occurs when switching ICR.

Possible reasons: The long power supply cable leads to a large voltage drop on the equipment power supply cable, and turning on the IR light at night leads to a further increase of the voltage drop, resulting in restart of the device and black screen.

Solution: During construction, when the camera location is far from the power supply, you need to adopt long distance separate power supply or purchase –DP dual power supply to use 24V AC power supply.

## 11.3 Centralized Power Supply

The typical problem of centralized power supply is that there are obvious black stripes on the device screen, which interferes with the display.

The principle of centralized power supply is as follows:

Figure 11-1 Principle of centralized power supply

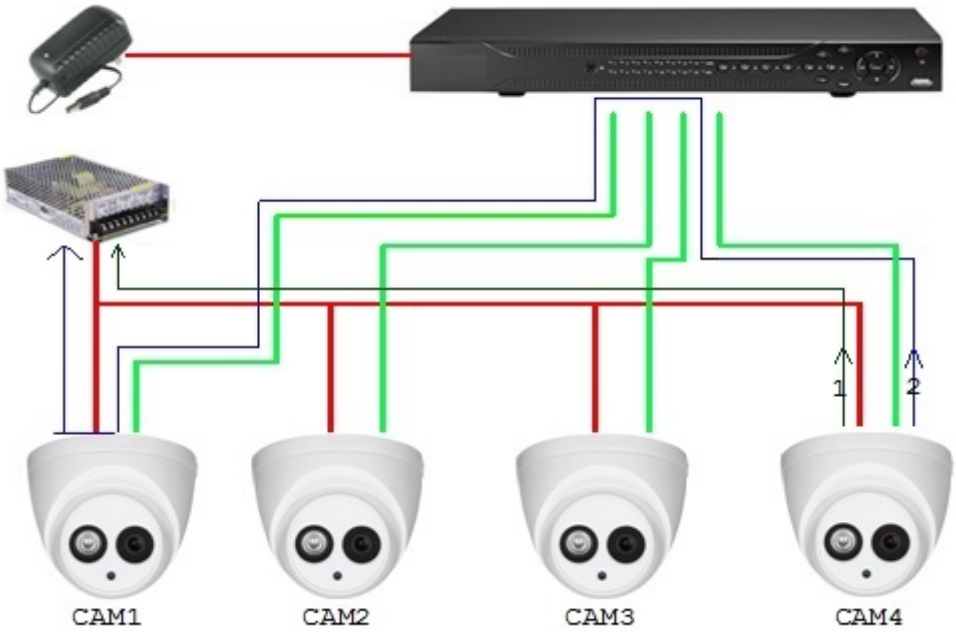


There are two paths for the power output of CAM4, return path 1 and return path 2. Reflow 2 first flows to CAM1, and then flows to the power supply from power supply ground of CAM1. In this way, the reflow of power supply ground CAM4 affects the video ground of CAM1, resulting in interference stripes on the screen. And CAM4 also interferes with CAM2 and CAM3.

In the same way, CAM1, CAM2 or CAM3 affects other cameras besides itself.

The main reason for the interference of centralized power supply is that the power supply ground of camera is not isolated. To solve this problem: Use dual-power devices with isolation of power supply ground; equip low-power devices with power isolators to block the return path 2 low-power devices can also use power isolators to block the return path 2; use isolated power supplies for each channel, or power the device separately, which are the two recommended methods.

## 11.4 Connector Waterproof Protection

HDCVI cameras need to be well waterproofed and protected. After installation, wrap the BNC connector and power connector tightly with insulated or waterproofed tape to prevent water and external electromotive forces. When metal casing device is installed on metal surfaces such as elevators and buses, the metal casing should not be in contact with the installation surface to prevent water and external electromotive forces.

Figure 11-2 Waterproof measures

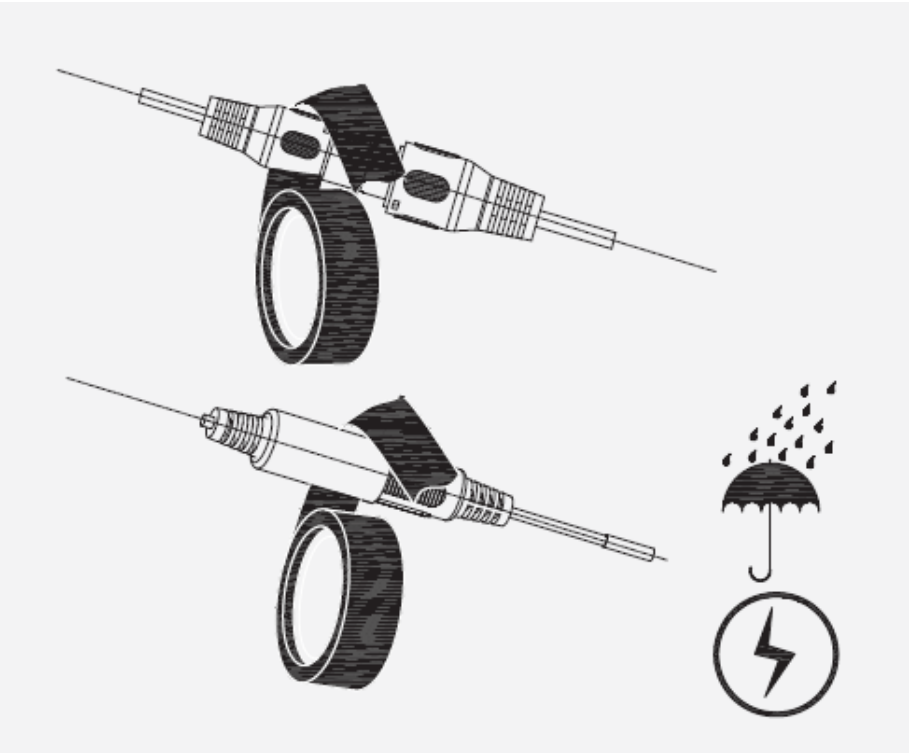

# Maintenance

In order to maintain the image quality and proper functioning of the device, please read the following maintenance instructions carefully and hold rigid adherence.

## Disassembly and Desiccant Replacement

- Carefully follow the instructions in the manual when performing any disassembly operation about the device; otherwise, it might cause water leakage or poor image quality due to unprofessional disassemble.
- Please contact after-sale service for desiccant replacement if there is condensed fog found on the lens after unpacking or when the desiccant turns green. (Not all models are included with the desiccant).

## Maintaining Lens and Lens Protector

- The lens and lens protector are covered with antireflection coating, which could be contaminated or damaged and result in lens scratches or haze images when being touched with dust, grease, fingerprints and other similar substances.
- Do not touch the image sensor (CCD or CMOS) directly. Dust and dirt could be removed with air blower, or you can wipe the lens gently with soft cloth that moistened with alcohol.

## Maintaining Device Body

- Device body can be cleaned with soft dry cloth, which can also be used to remove stubborn stains when moistened with mild detergent.
- To avoid possible damage on device body coating which could cause performance decrease, do not use volatile solvent such as alcohol, benzene, diluent and so on to clean the device body, nor can strong, abrasive detergent be used.

# Appendix 1 Cybersecurity Recommendations

**Mandatory actions to be taken for basic device network security:**

1. **Use Strong Passwords**

   Please refer to the following suggestions to set passwords:

   - The length should not be less than 8 characters;
   - Include at least two types of characters; character types include upper and lower case letters, numbers and symbols;
   - Do not contain the account name or the account name in reverse order;
   - Do not use continuous characters, such as 123, abc, etc.;
   - Do not use overlapped characters, such as 111, aaa, etc.;

2. **Update Firmware and Client Software in Time**

   - According to the standard procedure in Tech-industry, we recommend to keep your device (such as NVR, DVR, IP camera, etc.) firmware up-to-date to ensure the system is equipped with the latest security patches and fixes. When the device is connected to the public network, it is recommended to enable the "auto-check for updates" function to obtain timely information of firmware updates released by the manufacturer.
   - We suggest that you download and use the latest version of client software.

**"Nice to have" recommendations to improve your device network security:**

1. **Physical Protection**

   We suggest that you perform physical protection to device, especially storage devices. For example, place the device in a special computer room and cabinet, and implement well-done access control permission and key management to prevent unauthorized personnel from carrying out physical contacts such as damaging hardware, unauthorized connection of removable device (such as USB flash disk, serial port), etc.

2. **Change Passwords Regularly**

   We suggest that you change passwords regularly to reduce the risk of being guessed or cracked.

3. **Set and Update Passwords Reset Information Timely**

   The device supports password reset function. Please set up related information for password reset in time, including the end user's mailbox and password protection questions. If the information changes, please modify it in time. When setting password protection questions, it is suggested not to use those that can be easily guessed.

4. **Enable Account Lock**

   The account lock feature is enabled by default, and we recommend you to keep it on to guarantee the account security. If an attacker attempts to log in with the wrong password several times, the corresponding account and the source IP address will be locked.

5. **Change Default HTTP and Other Service Ports**

   We suggest you to change default HTTP and other service ports into any set of numbers between 1024~65535, reducing the risk of outsiders being able to guess which ports you are using.

6. **Enable HTTPS**

   We suggest you to enable HTTPS, so that you visit Web service through a secure communication channel.

7. **MAC Address Binding**

   We recommend you to bind the IP and MAC address of the gateway to the device, thus reducing the risk of ARP spoofing.

8. **Assign Accounts and Privileges Reasonably**

   According to business and management requirements, reasonably add users and assign a minimum set of permissions to them.

9. **Disable Unnecessary Services and Choose Secure Modes**

   If not needed, it is recommended to turn off some services such as SNMP, SMTP, UPnP, etc., to reduce risks.

   If necessary, it is highly recommended that you use safe modes, including but not limited to the following services:

   - SNMP: Choose SNMP v3, and set up strong encryption passwords and authentication passwords.
   - SMTP: Choose TLS to access mailbox server.
   - FTP: Choose SFTP, and set up strong passwords.
   - AP hotspot: Choose WPA2-PSK encryption mode, and set up strong passwords.

10. **Audio and Video Encrypted Transmission**

    If your audio and video data contents are very important or sensitive, we recommend that you use encrypted transmission function, to reduce the risk of audio and video data being stolen during transmission.

    Reminder: encrypted transmission will cause some loss in transmission efficiency.

11. **Secure Auditing**

    - Check online users: we suggest that you check online users regularly to see if the device is logged in without authorization.
    - Check device log: By viewing the logs, you can know the IP addresses that were used to log in to your devices and their key operations.

12. **Network Log**

    Due to the limited storage capacity of the device, the stored log is limited. If you need to save the log for a long time, it is recommended that you enable the network log function to ensure that the critical logs are synchronized to the network log server for tracing.

13. **Construct a Safe Network Environment**

    In order to better ensure the safety of device and reduce potential cyber risks, we recommend:

    - Disable the port mapping function of the router to avoid direct access to the intranet devices from external network.
    - The network should be partitioned and isolated according to the actual network needs. If there are no communication requirements between two sub networks, it is suggested to use VLAN, network GAP and other technologies to partition the network, so as to achieve the network isolation effect.
    - Establish the 802.1x access authentication system to reduce the risk of unauthorized access to private networks.
    - Enable IP/MAC address filtering function to limit the range of hosts allowed to access the device.