IR Intelligent Speed Dome

Installation Manual

Version 1.0.0

Table of Contents

1 INSTALLATION PREPARATION 1

1.1 Basic Requirement 1

1.2 Installation Check 1

1.3 Cable Preparation 1

1.3.1 The Min Specification Requirements of Cable 1
1.3.2 Select Power Supply Cable 2

2 DEVICE INSTALLATION 3

2.1 Check Accessories 3

2.2 Open Device 3

2.3 DIP Switch Setup 4

2.3.1 DIP Switch Location and Function 4
2.3.2 DIP Switch Setup 4
2.3.3 Address Setup 4
2.3.4 Baud Rate and Parity Setup 5
2.3.5 Terminal Matched Resistance Setup 6

2.4 Reset Button Location and Micro SD Card Slot Installation 8

2.4.1 Use Reset Button 8
2.4.2 Install Micro SD Card 8

2.5 Camera Cable 9

2.5.1 Cable Description 9
2.5.2 Cable Connection 10
2.5.3 Alarm Cable Connection 10
2.5.4 Connect Camera GND Cable 10

3 WALL-MOUNT INSTALLATION 11

3.1 Installation Component and Dimension 11

3.2 Wall-Mounted Installation Steps 11

3.2.1 Installation Conditions 11
3.2.2 Installation Steps 12

4 HANG-MOUNT INSTALLATION 15

4.1 Installation Component and Dimension 15

4.2 Hang-mounted Bracket Installation Steps 15

4.2.1 Installation Conditions 15
4.2.2 Installation Steps 16

5 APPENDIX I LIGHTNING PROOF AND SURGE PROTECTION (OUTDOORS) 19

5.1 Lightning Protection (Indoors) 19

6 APPENDIX II ABOUT RS485 BUS 21

6.1 RS485 Bus Main Feature 21

6.2 RS485 Bus Transmission Distance 21

6.3 The Problem in Practical Use 21

6.4 RS485 Bus FAQ 22

7 APPENDIX III THE RELATIONSHIP BETWEEN AC 24V CABLE DIAMETER AND TRANSMISSION DISTANCE 23

8 APPENDIX IV THE RELATIONSHIP BETWEEN DC 12V CABLE DIAMETER AND TRANSMISSION DISTANCE 24

9 APPENDIX V WIRE GAUGE REFERENCE SHEET 26

Welcome

Thank you for purchasing our speed dome!

Please read the following safeguards and warnings carefully before you install or use the product!

Important Safeguards and Warnings

Safety Measures

1. Qualified Engineer Needed

- The installation engineer or maintenance engineer shall have corresponding CCTV system installation certificate or maintenance qualification certificate.
- The installation engineer or maintenance engineer shall have qualification certificate for work at height.
- The installation engineer or maintenance engineer shall have the basic knowledge and operation technique for low-voltage cable layout and low-voltage electronic cable connection.
- Please read the installation manual carefully and keep it well for future reference,
- We are not liable for any problems caused by unauthorized modifications or attempted repair.

2. Lifting Appliance Requirement

- Please select the proper speed dome installation mode and use the lifting appliances at the safety environment.
- The lifting appliances shall have the enough capacity to reach the installation height.
- The lifting appliances shall have safe performance.

The precaution measures include two types: Warning and Note.

- **Warning**: It is to alert you there is an optional risk of death or series injury!
- **Note**: It is to alert you there is an optional risk of damage or property loss!

Warning

1. All installation and operation here should conform to your local electrical safety codes. We assume no liability or responsibility for all the fires or electrical shock caused by improper handling or installation.
2. Do not connect several speed domes to one power adapter. It may result in overheat or fire if it exceeds the rated load.
3. Before you connect the cable, install or uninstall, or begin the daily maintenance work, please turn off the power and unplug the power cable.
4. Please make sure the product is secured firmly on the wall or the ceiling.
5. Please turn off the power and unplug the power cable, If there is any smoke, disgusting smell, or noise. Please contact your local retailer or customer service center for help.

6. All the examination and repair work should be done by the qualified service engineers. We are not liable for any problems caused by unauthorized modifications or attempted repair.

Note

1. Safety Transportation

- Heavy stress, violent vibration or water splash are not allowed during transportation, storage and installation.
- This series product must use split type package during the transportation.
- We are not liable for any damage or problem resulting from the integrated package during the transportation.

2. When device is malfunction

Shut down the device and disconnect the power cable immediately if there is smoke, abnormal smell or abnormal function. Please contact your local retailer ASAP.

3. Do not try to dismantle or modify the device

- There is risk of personal injury or device damage resulting from opening the shell.
- Please contact your local retailer if there is internal setup or maintenance requirement.
- We are not liable for any problems caused by unauthorized modifications or attempted repair.

4. Do not allow other object falling into the device

- Please make sure there is no metal or inflammable, explosive substance in the speed dome.
- The above mentioned objects in the device may result in fire, short-circuit or damage.
- Please shut down the device and disconnect the power cable if there is water or liquid falling into the camera. Please contact your local retailer ASAP.
- Please pay attention to the camera. Avoid the sea water or rain to erode the camera.

5. Handle carefully

Do not allow this series product fall down to the ground.
Avoid heavy vibration.

6. Installation Environment Requirement

- This series speed dome should be installed in a cool, dry place away from direct sunlight, inflammable, explosive substances and etc.
- This series product shall be away from the strong electromagnetism radiant, please keep it away from wireless power, TV transmitter, transformer and etc.

7. Daily Maintenance

- Please use the soft cloth to clean dust on the shell, or you can use soft cloth with cleaning liquid to clean the shell and then use soft cloth to make it dry.

- Do not use gasoline, dope thinner or other chemical material to clean the shell. It may result in shell transfiguration or paint flake.
- Do not allow the plastic or rubber material to touch the shell for a long time. It may result in paint flake.
- It is highly recommended to use the product with a lightning-proof device, which can realize better lightning-proof effect.

Regulatory Information

The regulatory information herein might vary according to the model you purchased. Some information is only applicable for the country or region where product is sold.

FCC Information

CAUTION

Changes or modifications not expressly approved by the party responsible for compliance could void the user's authority to operate the equipment.

FCC conditions:

This device complies with part 15 of the FCC Rules. Operation is subject to the following two conditions:

- This device may not cause harmful interference.
- This device must accept any interference received, including interference that may cause undesired operation.

FCC compliance:

This equipment has been tested and found to comply with the limits for a digital device, pursuant to part 15 of the FCC Rules. This equipment generate, uses and can radiate radio frequency energy and, if not installed and used in accordance with the guide, may cause harmful interference to radio communication.

- For class A device, these limits are designed to provide reasonable protection against harmful interference in a commercial environment. Operation of this equipment in a residential area is likely to cause harmful interference in which case the user will be required to correct the interference at his own expense.
- For class B device, these limits are designed to provide reasonable protection against harmful interference in a residential installation. However, there is no guarantee that interference will not occur in a particular installation. If this equipment does cause harmful interference to radio or television reception, which can be determined by turning the equipment off and on, the user is encouraged to try to correct the interference by one or more of the following measures:
  - Reorient or relocate the receiving antenna.
  - Increase the separation between the equipment and receiver.
  - Connect the equipment into an outlet on a circuit different from that to which the receiver is connected.
  - Consult the dealer or an experienced radio/TV technician for help.

1 Installation Preparation

1.1 Basic Requirement

- All installation and operation here should conform to your local electrical safety code, fire protection regulations and other relevant regulations.
- Make sure the application scene of the camera meets the installation requirements. Please contact dealer if you have any confusions.
- Please use the product according to the operating environment.
- Please keep the original packing materials properly after opening the package. Please pack the camera with original packing materials and send it back for maintenance if anything happens to the product.

1.2 Installation Check

- Please make sure the installation environment has enough space to install the product and its mounting structure components.
- Please make sure the ceiling or wall can sustain 8X weight of the camera and corresponding mounting structure components.
- Please make sure the wall is thick enough to install expansion bolts (users need to prepare by themselves).
- It needs to pay attention that the installation height is required to be more than 6m if it is an intelligent tracking device or laser speed dome.

1.3 Cable Preparation

Please select the min specification requirement of cable and video coaxial cable according to the transmission distance.

1.3.1 The Min Specification Requirements of Cable

- 75 ohm impedance.
- Full cable with copper conductor
- 95% knitted copper shield
- RS485 communication cable, refer to appendix 2 for more details.

Note

The following table can be applied to analog speed dome and network speed dome.

International Model	Max Distance (Ft\M)
RG59/U	750ft (229m)
RG6/U	1,000ft (305m)
RG11/U	1,500ft (457m)

Table 1-1

Note

The following table can be applied to HDAVS speed dome.

International Model	Max Transmission Distance (Ft/M)
SYV-75-3	720P（25fps/30fps）：1,640ft/500m
	720P（50fps/60fps）：984ft/300m
	1080P（25fps/30fps）：984ft/300m

Table 1-2

1.3.2 Select Power Supply Cable

Refer to “Appendix 3 AC 24V Cable Diameter and Transmission Distance” for AC 24V power supply device.

Refer to “Appendix 4 DC 12V Cable Diameter and Transmission Distance” for DC 12V power supply device.

2 Device Installation

2.1 Check Accessories

Before installation, please check the accessories one by one according to the packing list. Please make sure all the components listed are includes.

2.2 Open Device

Please open the box and then take out the device, the device appearance is shown in Figure 2-1.

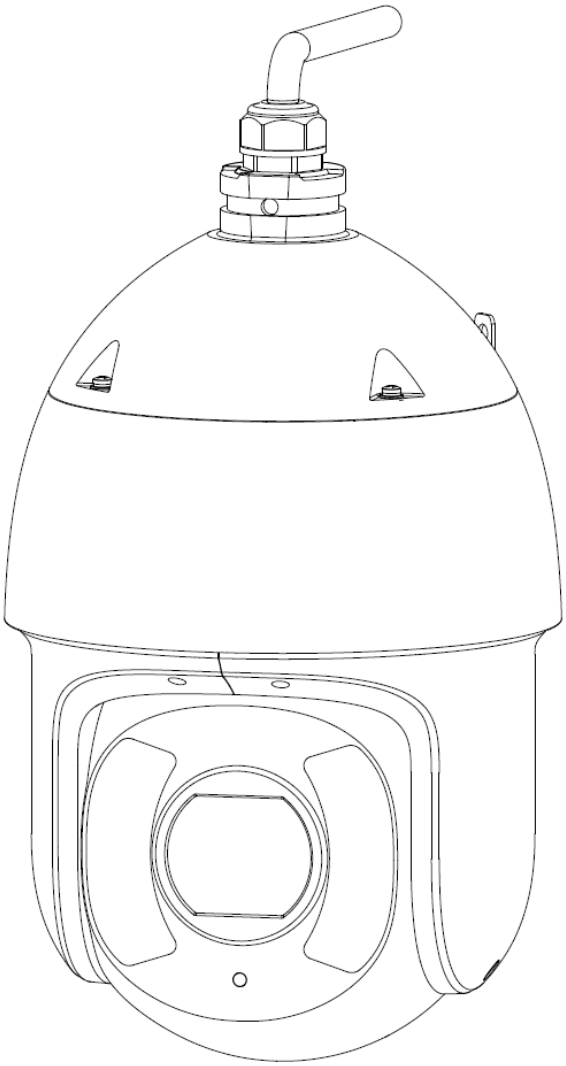

Figure 2-1

Both AVS speed dome and network speed dome have the same appearance, but the internal structure differs from each other. Please select the corresponding chapter to refer to according to the device you have purchased.

- AVS speed dome: Please refer to “2.3 DIP Switch Setup (Only for the reference of AVS speed dome):
- Network speed dome: Please refer to “2.4 Reset Button Location and Micro SD Card Installation (Only for the reference of network speed dome)”

2.3 DIP Switch Setup

2.3.1 DIP Switch Location and Function

Open the rear cover of the device, then you can see there is DIP switch on the ISP board which is above the camera module, which is shown in Figure 2-2. The DIP switch is used to set the parameters of address, baud rate and parity.

Note

It doesn't have to make relevant RS485 settings when the HDAVS intelligent speed dome is only using coaxial control.

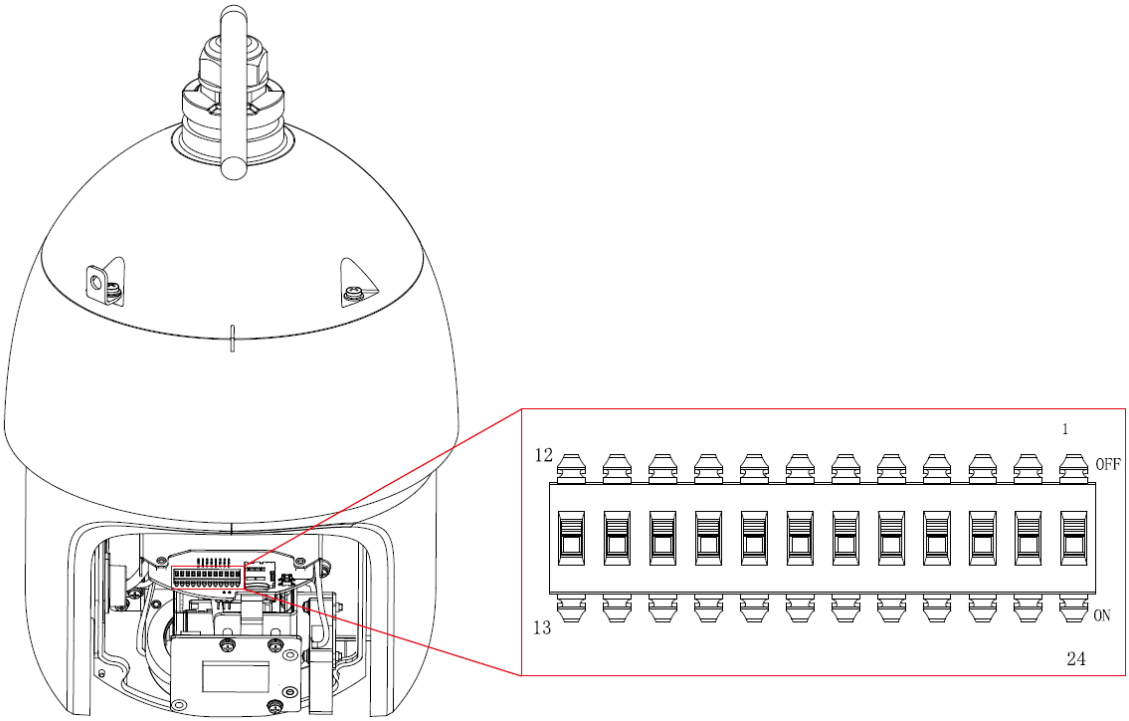

Figure 2-2

2.3.2 DIP Switch Setup

It has to set the address number, baud rate, parity or HD/SD video format used by speed dome before controlling the device. The speed dome will respond to its control commands after these settings are completed.

Note

- It has to cut off the power and restart the device to make new settings valid.
- For the speed dome with cover, it needs to take down the transparent dome cover before setting, remove the EPE foam; it needs to install the transparent dome cover back in place after settings are completed.

The speed dome DIP switch is used to confirm address, baud rate and parity. When the switch is moved to ON as 1, then 1 is the lowest bit and 8 is the highest in the address setting dial code; 1 is the lowest bit and 4 is the highest in the setting dial code of baud rate, parity or HD/SD video format (The intelligent speed dome can self-adapt to PELCO-D, PELCO-P and industrial standard protocol, the control protocol doesn't need to be set via dial code).

2.3.3 Address Setup

Note

The figure of DIP switch shown in the user manual is for reference only; please refer to the actual device for more details about the DIP switch.

The speed dome can use DIP switch to set address number, encoding mode can adopt binary coding. 1(24) ~ 8(17) is valid bit, the highest address bit is 255, please refer to Figure 2-3 for address label and refer to Table 2-1 for address bit setting.

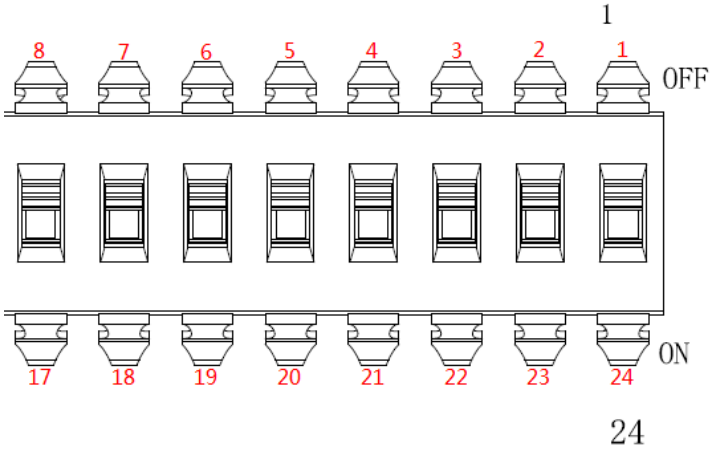

Figure 2-3

Address	1(24)	2(23)	3(22)	4(21)	5(20)	6(19)	7(18)	8(17)
1	OFF	OFF	OFF	OFF	OFF	OFF	OFF	OFF
1	ON	OFF	OFF	OFF	OFF	OFF	OFF	OFF
2	OFF	ON	OFF	OFF	OFF	OFF	OFF	OFF
3	ON	ON	OFF	OFF	OFF	OFF	OFF	OFF
4	OFF	OFF	ON	OFF	OFF	OFF	OFF	OFF
5	ON	OFF	ON	OFF	OFF	OFF	OFF	OFF
6	OFF	ON	ON	OFF	OFF	OFF	OFF	OFF
7	ON	ON	ON	OFF	OFF	OFF	OFF	OFF
8	OFF	OFF	OFF	ON	OFF	OFF	OFF	OFF
……	……							
254	OFF	ON	ON	ON	ON	ON	ON	ON
255	ON	ON	ON	ON	ON	ON	ON	ON

Table 2-1

2.3.4 Baud Rate and Parity Setup

Note

The figure of DIP switch shown in the user manual is for reference only; please refer to the actual device for more details about the DIP switch.

It is to set the baud rate and parity of the speed dome. 9(16) and 10(15) is setting bit of baud rate, 11(14) and 12(13) is setting bit of parity. Please refer to Figure 2-4 for label and refer to Table 2-2 and Table 2-3 for setting.

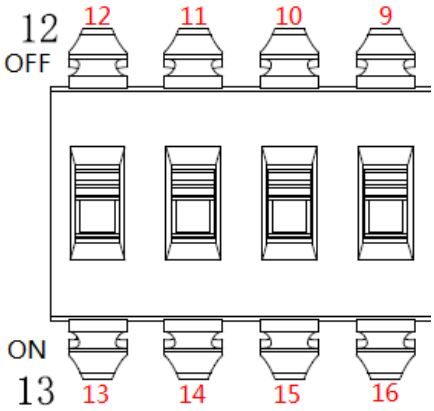

Figure 2-4

9(16)	10(15)	Baud Rate
OFF	OFF	9600bps
ON	OFF	4800bps
OFF	ON	2400bps
ON	ON	1200bps

Table 2-2

11(14)	12(13)	Parity
OFF	OFF	NONE
ON	OFF	EVEN
OFF	ON	ODD
ON	ON	NONE

Table 2-3

2.3.5 Terminal Matched Resistance Setup

The jumper cap which is used to set terminal resistance is located below module ISP, which is shown in Figure 2-5.

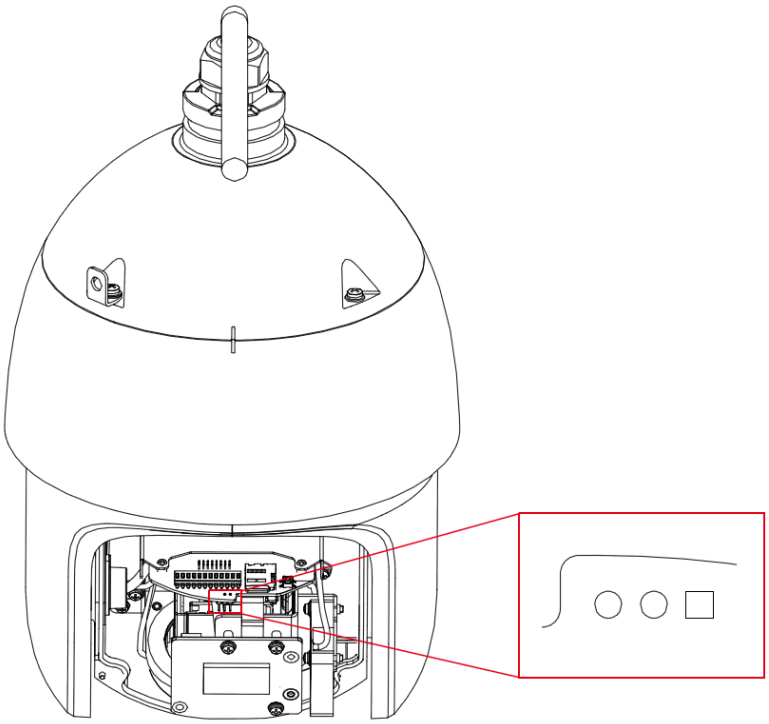

Figure 2-5

There are two connection modes of device terminal 120Ω resistance, which has already existed on the power board. Please refer to Figure 2-6 for more details.

Connection Mode / Resistance	2-3	1-2
120Ω	ON	OFF

Figure 2-6

Refer to Figure 2-11 for the default connection mode, at this moment, the jumper cap on the power board is connected to the location 2~3 of the socket and 120Ω resistance hasn't been connected yet.

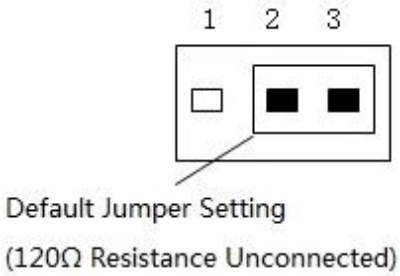

Figure 2-7

It needs to plug out the jumper cap from 2~3 location when it needs to connect to 120Ω resistance, and then connect to the location of 1~2. In this case, 120Ω resistance is connected to the circuit, which is shown in Figure 2-8.

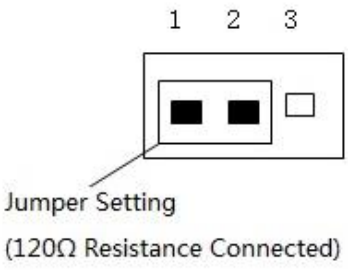

Figure 2-8

2.4 Reset Button Location and Micro SD Card Slot Installation

Open the rear cover of the speed dome, then you can see there is reset button and Micro SD card slot on the ISP board which is above the camera module. Please refer to Figure 2-9 for more details.

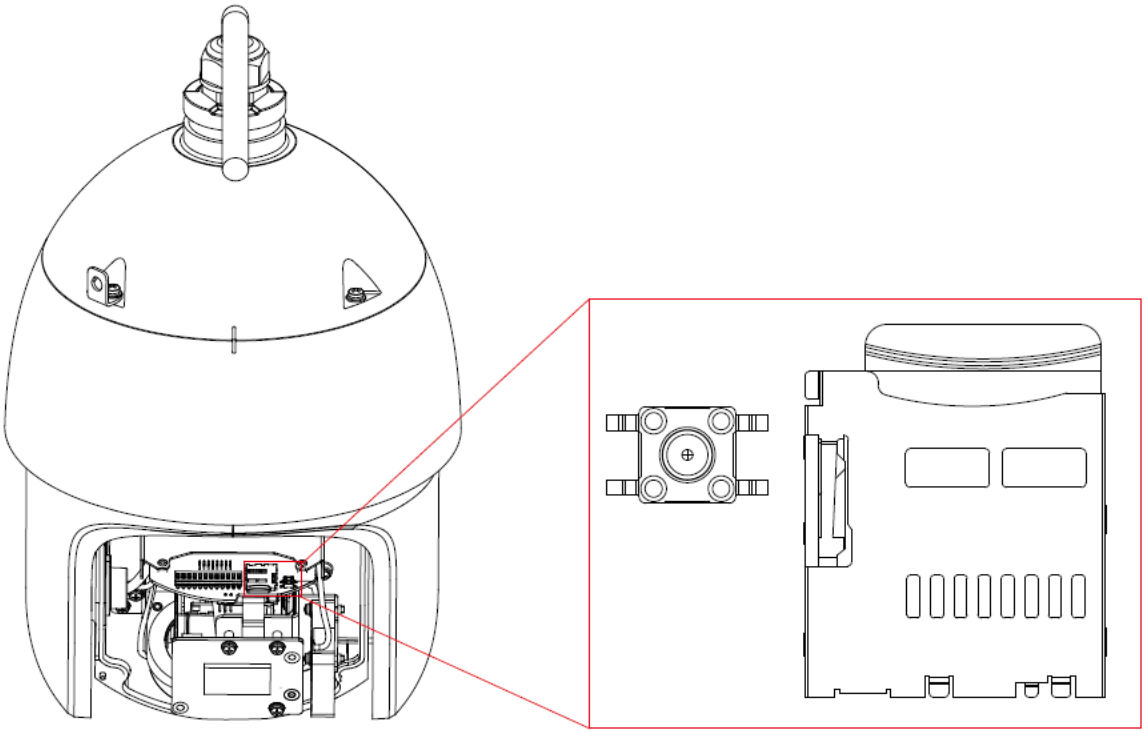

Figure 2-9

2.4.1 Use Reset Button

Reset button is used to reset the network system.

Open the rear cover of speed dome and long press the reset button (more than 10s) to reset the device, then all the settings will be restored to factory default.

2.4.2 Install Micro SD Card

Micro SD card is used for data storage.

Make the side with metal contact of the Micro SD card face downward, (pay attention to the direction of inserting Micro SD card) insert it into the slot.

Note

Push the SD card according to the direction where the card is inserted, and the card will pop out automatically.

2.5 Camera Cable

2.5.1 Cable Description

The camera is equipped with a multi-functional combination cable by default, which includes power cable, video cable, audio cable, RS485 control cable, alarm cable, network cable, high-frequency cable and optical fiber cable etc. The cable detail is shown in Figure 2-10.

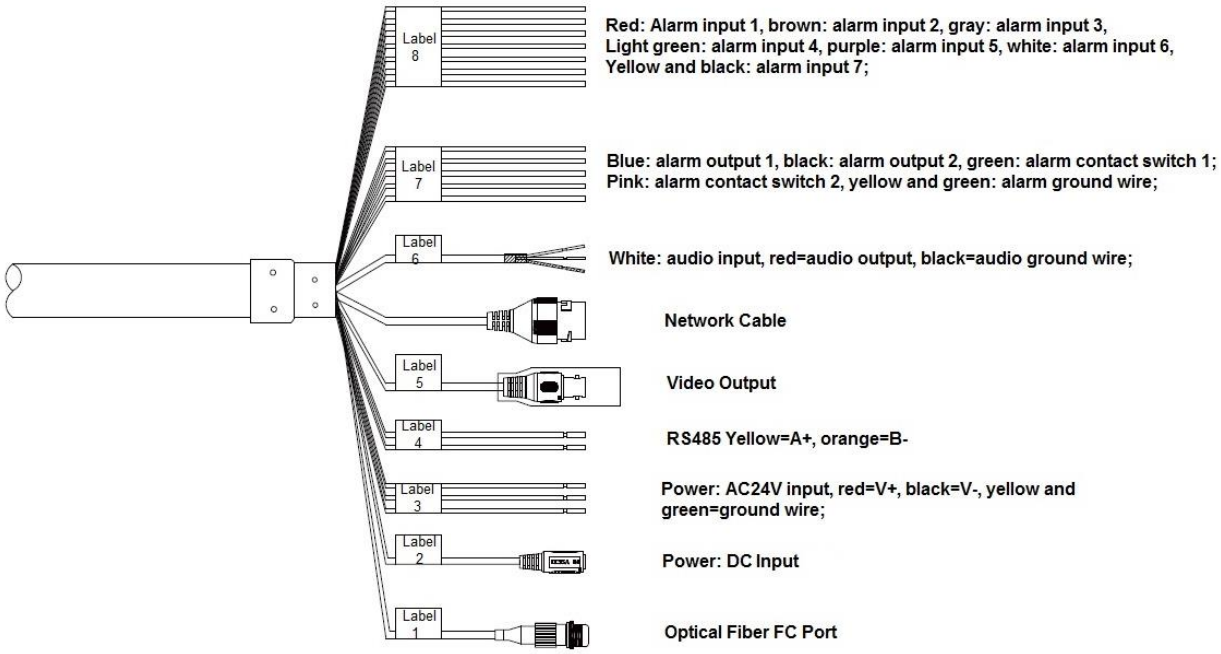

Figure 2-10

Note

Different models have different cable combinations; please refer to the actual cable combination for more details. The cable combination is the most comprehensive example shown in the figure above.

It is prohibited to pull the cable to lift the speed dome when moving the device, the wrong way of carrying device is shown in Figure 2-11.

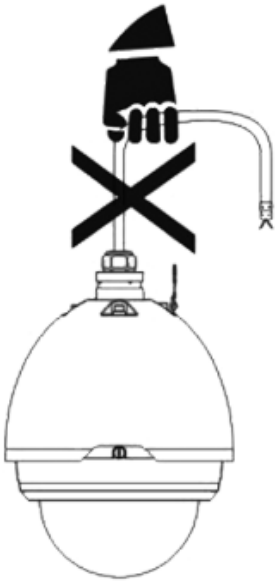

Figure 2-11

2.5.2 Cable Connection

Connect cable which is pulled out of wall to the corresponding power cable, video cable, audio cable, RS-485 control cable, alarm cable, network cable, high frequency cable and optical fiber cable etc. (according to the actual requirements) of the multi-functional combination cable, and then twine the cable connector with insulated tape to make it waterproof.

Note

- During actual installation, make sure the wire diameter of the cable which is to connect to RS485 control cable can’t be too big; otherwise it will affect the control effect. Please refer to appendix 2 RS485 bus for relevant introduction.

2.5.3 Alarm Cable Connection

The alarm cable connection mode and config steps are shown as follows:

Step 1

Connect alarm input device to the ALARM IN and ALARM GND of the user cable.

Step 2

Connect alarm output device to the ALARM OUT and ALARM COM of the user cable, alarm output is the relay switch output.

Step 3

Open the device WEB interface, make corresponding settings to the alarm input and output device in “Setup > Event > Alarm Setup". The alarm input of WEB is corresponding to the alarm input of the user cable. It is to set the corresponding NO and NC output according to the high and low level signal generated by alarm input device when alarm triggers.

Step 4

Set the alarm output situation of user cable on the WEB.

2.5.4 Connect Camera GND Cable

Connect the power line YELLOW & GREEN of the combination cable to the lightning protection device, and make sure the lightning protection device is well grounded.

3 Wall-Mount Installation

3.1 Installation Component and Dimension

The wall-mounted bracket is shown in Figure 3-1; refer to Figure 3-2 for bracket dimension.

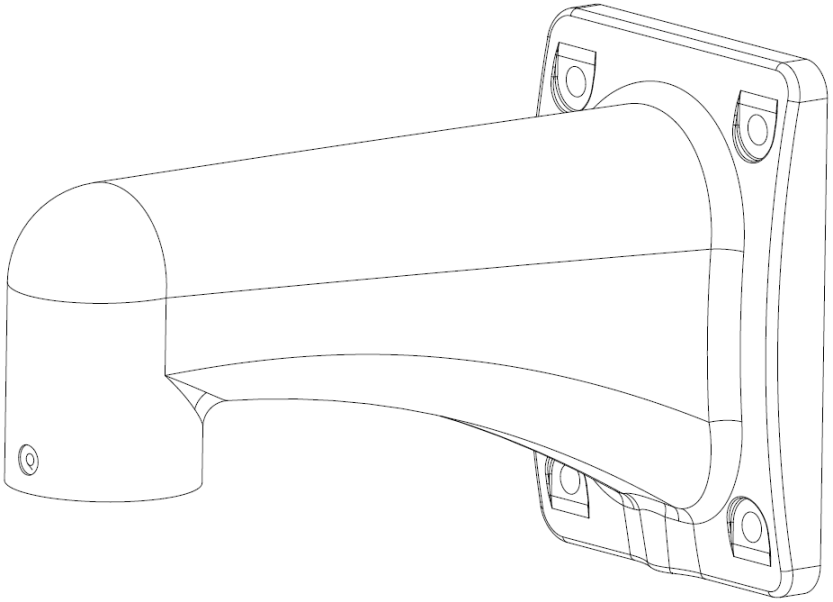

Figure 3-1

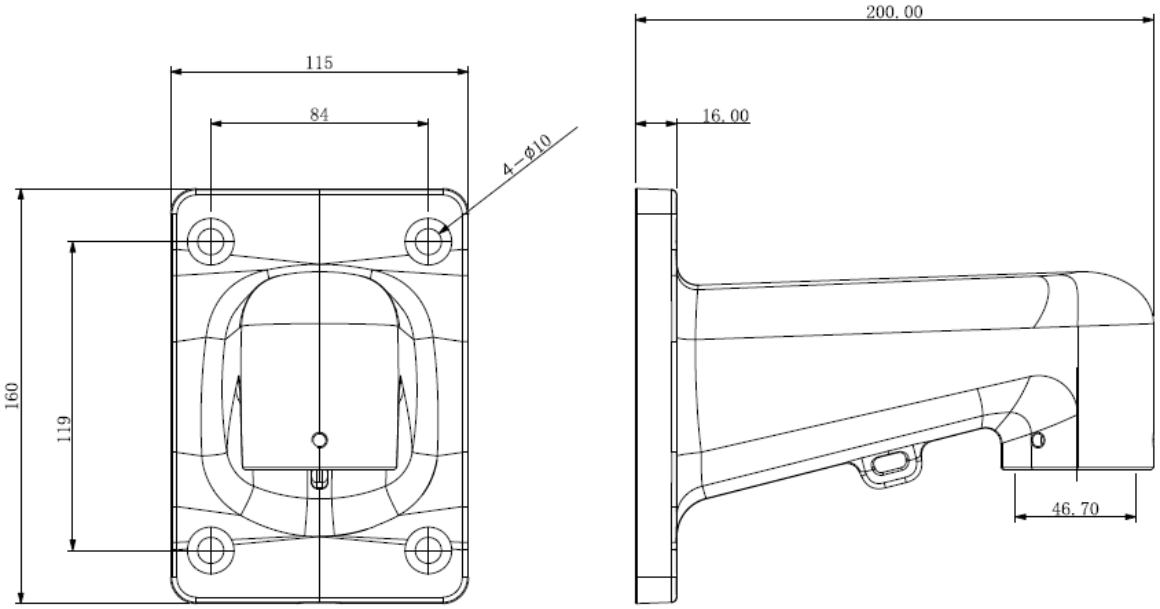

Figure 3-2

3.2 Wall-Mounted Installation Steps

3.2.1 Installation Conditions

The wall-mounted speed dome can be used on hard wall structure in both indoor and outdoor environments. The wall needs to meet the following installation conditions:

- The wall shall be thick enough to install expansion bolts.
- The wall shall sustain at least 8X weight of the camera and bracket etc.

3.2.2 Installation Steps

Step 1

Take pedestal of wall-mounted bracket as template; confirm the location of threaded hole and screw. Draw the screw location on the wall and knock the expansion bolts into the screw holes.

Step 2

Pull the speed dome cable through the main body of bracket, and hang both sides of the steel wire rope on the fixing buckle of the speed dome and the fixing buckle under the bracket respectively, which is shown in Figure 3-3.

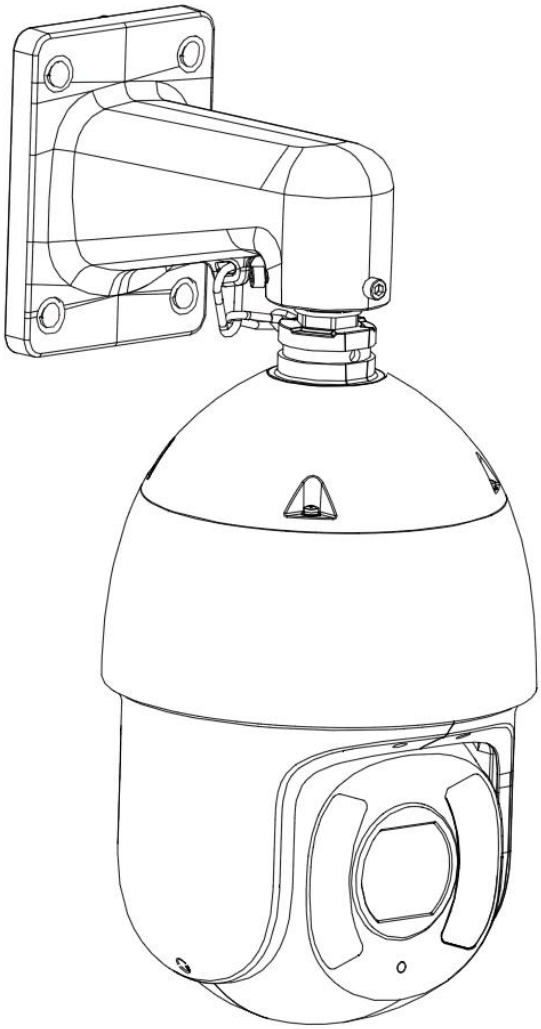

Figure 3-3

Step 3

Push the speed dome upward to make the flange enter the bracket, and use hex bolt to tighten the screws on the bracket, which is shown in Figure 3-4.

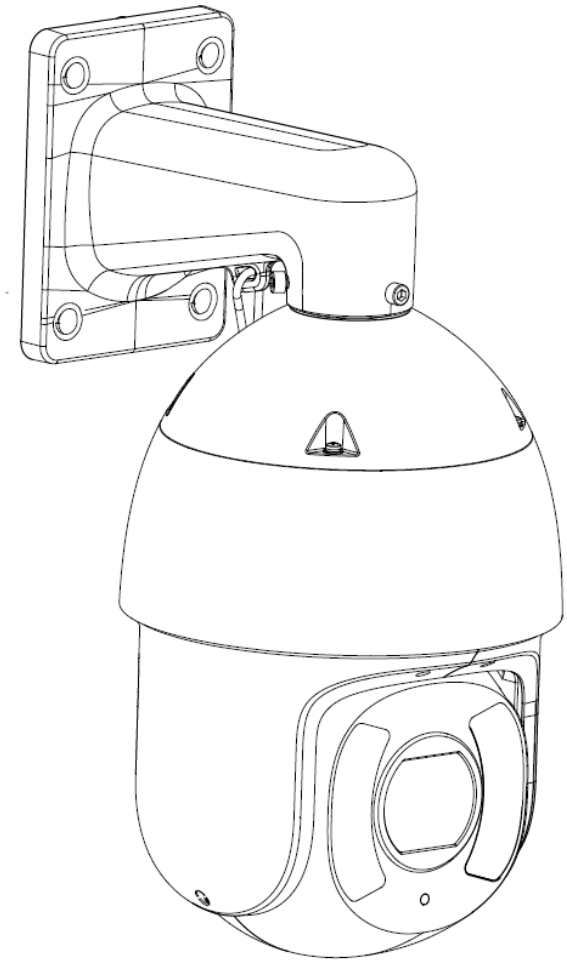

Figure 3-4

Step 4

Lift the camera and bracket to the same altitude as the punch position on the wall, use screw to fix the speed dome and bracket on the wall to complete installation, which is shown in Figure 3-5.

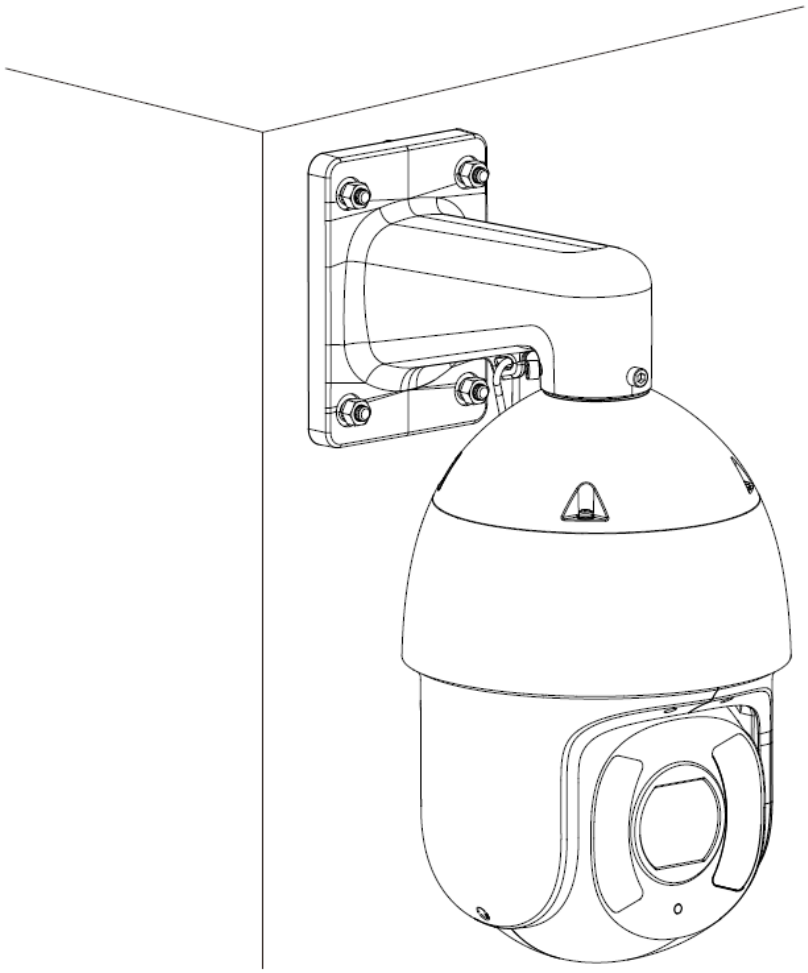

Figure 3-5

4 Hang-Mount Installation

4.1 Installation Component and Dimension

The hang-mounted bracket is shown in Figure 4-1; refer to Figure 4-2 for bracket dimension.

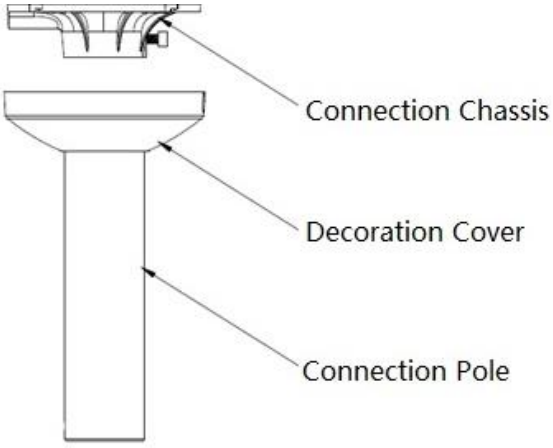

Figure 4-1

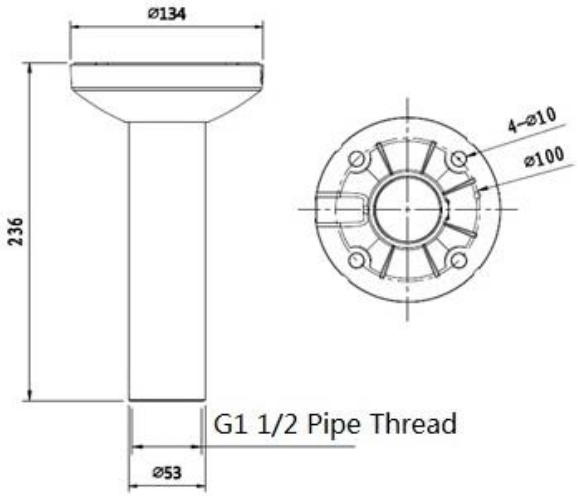

Figure 4-2

Note

The adjustable range of bracket length is: default 200mm, optional 400mm; it only needs to replace the connection pole.

4.2 Hang-mounted Bracket Installation Steps

4.2.1 Installation Conditions

The hang-mounted speed dome can be installed on hard wall structure in both indoor and outdoor environments. The wall needs to meet the following installation conditions:

- The wall shall be thick enough to install expansion bolts.
- The wall shall sustain at least 8X weight of the camera and bracket etc.

4.2.2 Installation Steps

Step 1

As it is shown in Figure 4-3, first it needs to loosen the M4 screw on the lateral of the connection chassis to separate the connection chassis from the connection pole, and then pull the integration cable through the airproof slot at the bottom of connection chassis and make it pass through the center hole which connects to the flange and fix the connection chassis on the ceiling.

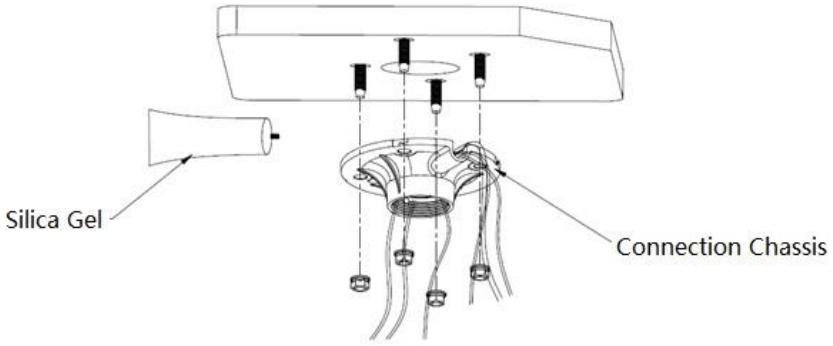

Figure 4-3

Note

It needs to paste the silica gel on the surface between the connection chassis and ceiling, and the location around cable exit to make it waterproof if the speed dome is applied in the outdoor environment.

Step 2

As it is shown in Figure 4-4, pull the cable through the connection pole, and then rotate the connection pole into the connection chassis and tighten the M4 screw firmly. Open the cable exit hole on the decoration cover and push it all the way to the bottom.

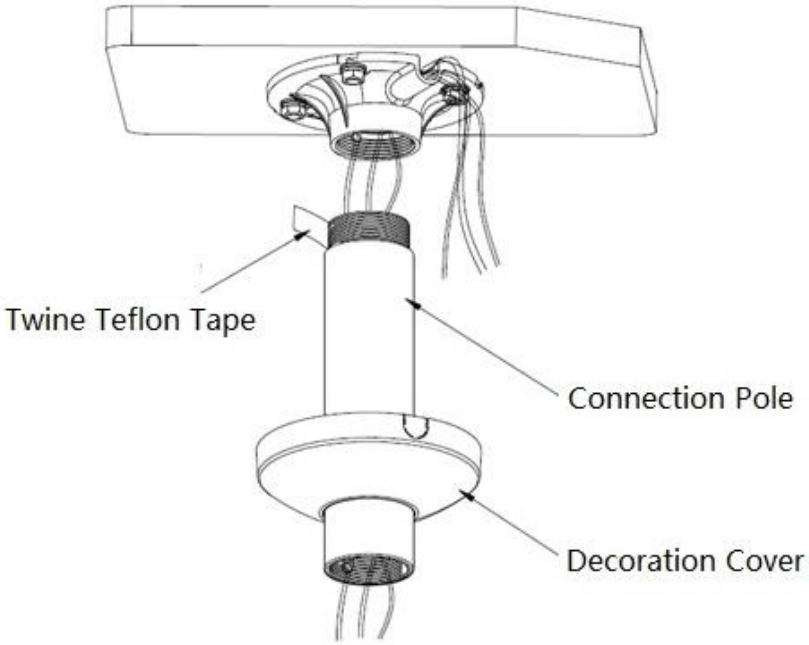

Figure 4-4

Note

It needs to twine enough Teflon tape at the top screw thread of the connection pole and then rotate the connection pole into the connection chassis firmly if the speed dome is used in the outdoor environments.

Step 3

Install the quick installation connector on the connection pole, which is shown in Figure 4-5.

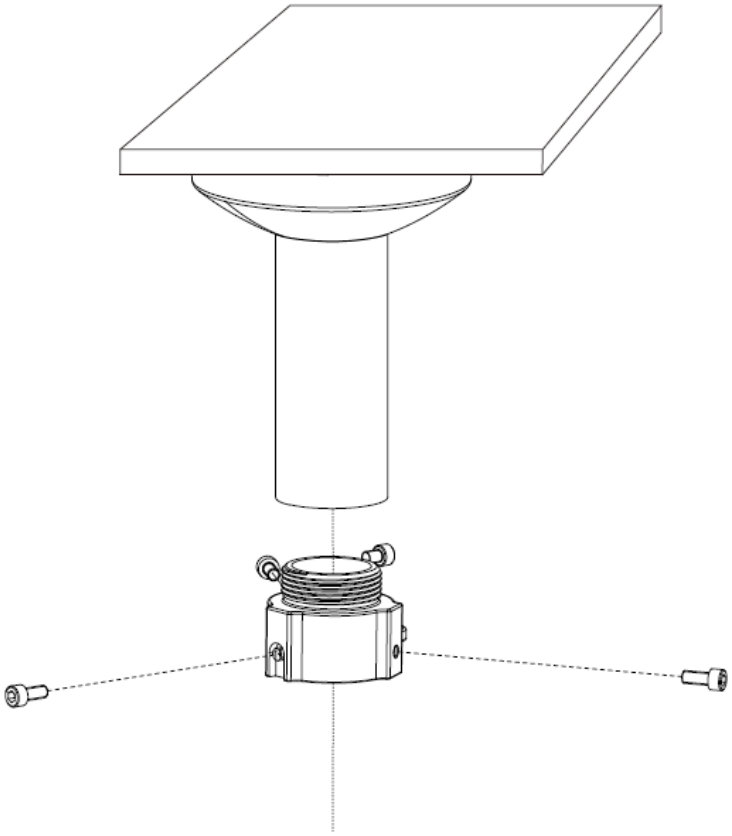

Figure 4-5

Step 4

Connect the speed dome cable to the cable pulled out from the connection pole, and fix the speed dome on the quick installation connector to complete installation, which is shown in Figure 4-6.

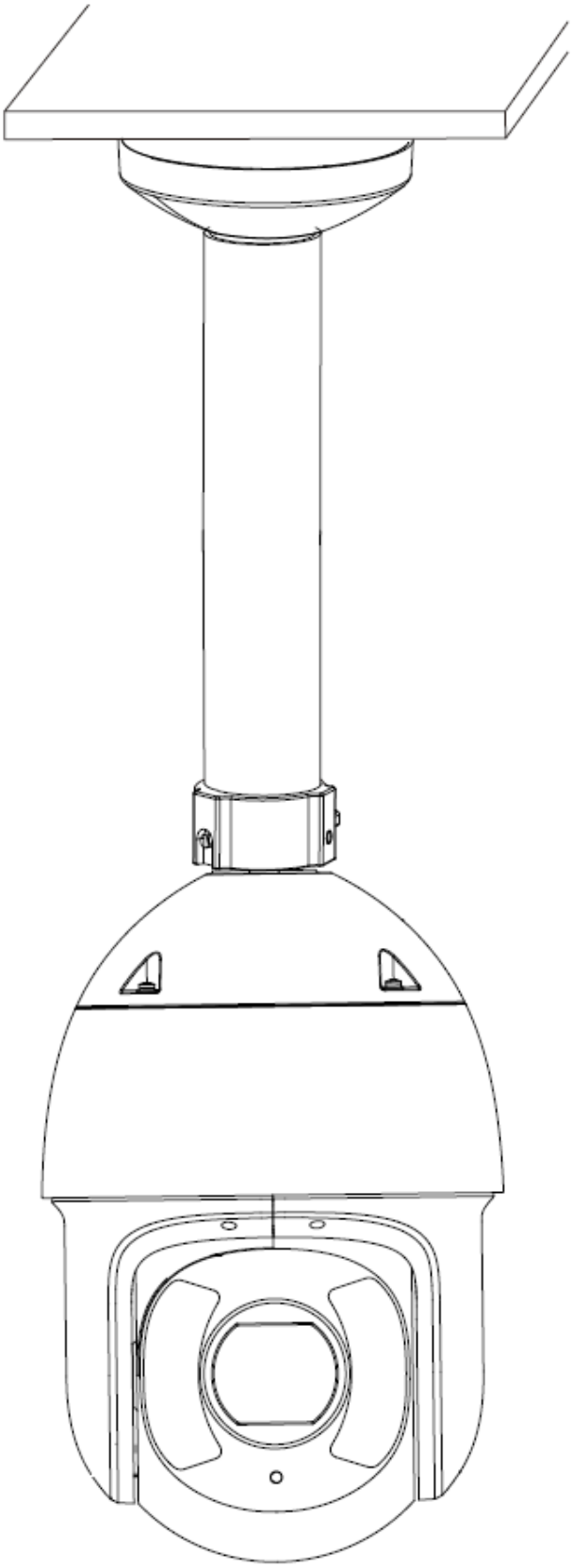

Figure 4-6

5 APPENDIX I LIGHTNING PROOF AND SURGE PROTECTION (Outdoors)

This series speed dome adopts TVS lighting protection technology. It can effectively prevent damages from various pulse signals below 6000W, such as sudden lighting and surge. While maintaining your local electrical safety code, you still need to take necessary precaution measures when installing the speed dome in the outdoor environment.

- The distance between the signal transmission cable and high-voltage device (or high-voltage cable) shall be at least 50 meters.
- Outdoor cable layout shall go under the penthouse if possible.
- For vast land, please use sealing steel tube under the land to implement cable layout and connects one point to the earth. Open floor cable layout is forbidden.
- In area of strong thunderstorm hit or near high sensitive voltage (such as near high-voltage transformer substation), you need to install additional high-power thunder protection device or lightning rod.
- The thunder protection and earth of the outdoor device and cable shall be considered in the building whole thunder protection and conform to your local national or industry standard.
- System shall adopt equal-potential wiring. The earth device shall meet anti-jamming and at the same time conforms to your local electrical safety code. The earth device shall not short circuit to N (neutral) line of high voltage power grid or mixed with other wires. When connect the system to the earth alone, the earth resistance shall not be more than 4Ω and earth cable cross-sectional area shall be no less than 25 mm^2. See Figure 5-1.

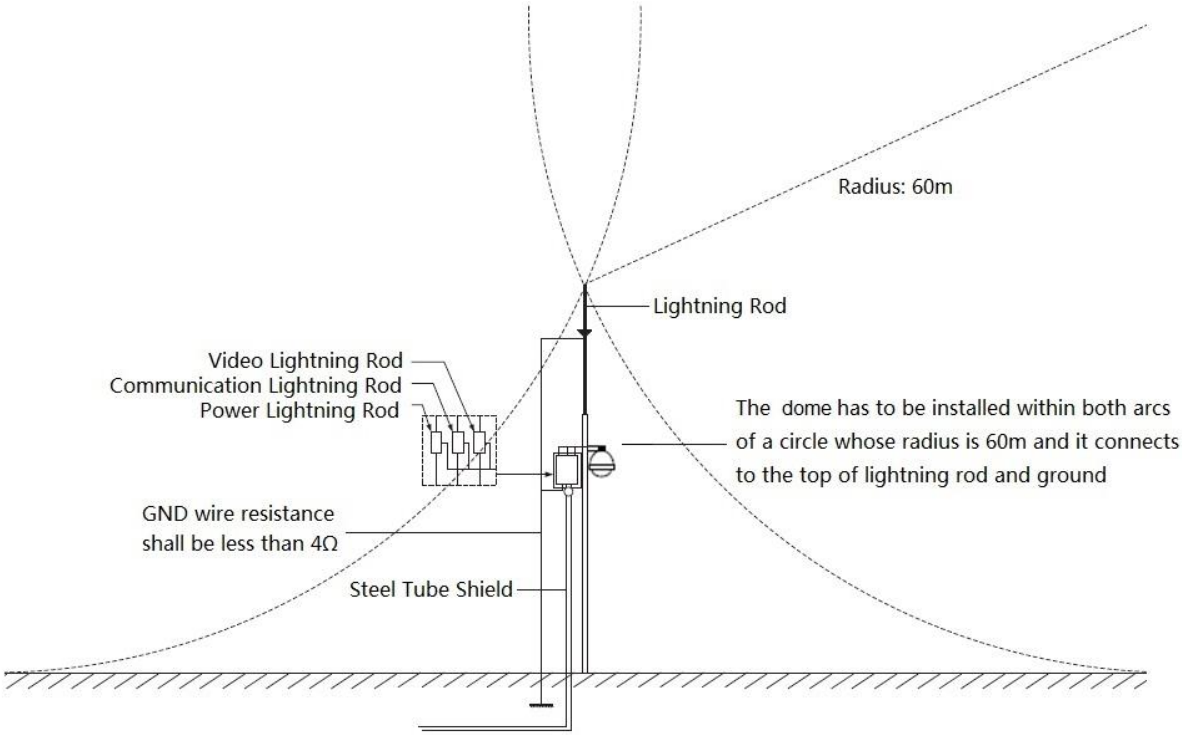

Figure 5-1

5.1 Lightning Protection (Indoors)

The yellow and green GND wire or GND screw of the speed dome should be reliably connected by several strands of copper wire with no less than 25mm^2 and indoor equipotential GND terminal. Please refer to Figure 5-2 for lightningproof installation mode.

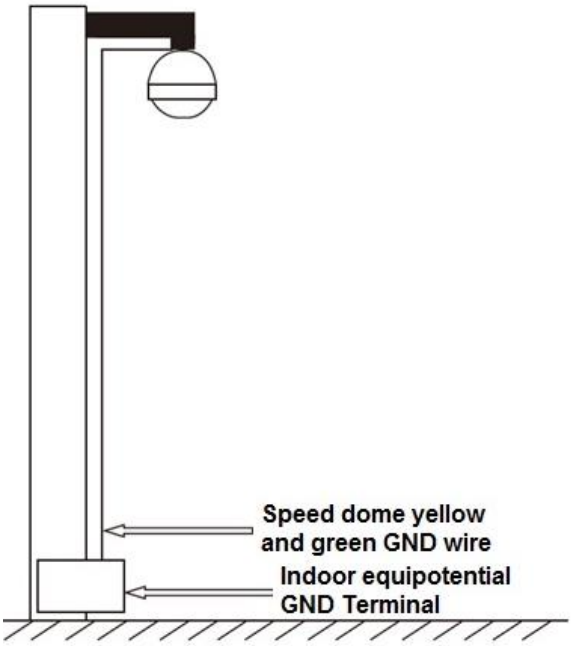

Figure 5-2

6 APPENDIX II ABOUT RS485 BUS

6.1 RS485 Bus Main Feature

RS485 is semi duplex communication cable of impedance 120Ω. Its max load amount is 32 effective loads (including main control device and devices to be charged).

6.2 RS485 Bus Transmission Distance

When we take 0.56mm (24AWG) twisted-pair as communication cable, the max transmission distance (theoretically) are listed below (according to different baud rates).

Baud Rate	Max Distance
2400 BPS	1800M
4800 BPS	1200M
9600 BPS	800M

In the following situations, the max transmission distance shall become shorter accordingly:

- The communication cable is a little bit thin;
- The surrounding environment has strong electromagnetic interference;
- There are too much devices connected to the RS485 bus;

And vice versa, the max transmission distance shall become longer.

6.3 The Problem in Practical Use

In practical usage, we usually adopt star type connection. The terminal resistance shall connect to the furthest two devices (Such as device 1# and device 15# in Figure 6-1). But this connection way does not conform to RS485 Bus standard. When the distances between devices are too long, the signal reflection occurs and anti-jamming decreases, thus the signal reliability becomes very low. You can see speed dome is not under control or speed dome is running automatically and cannot stop.

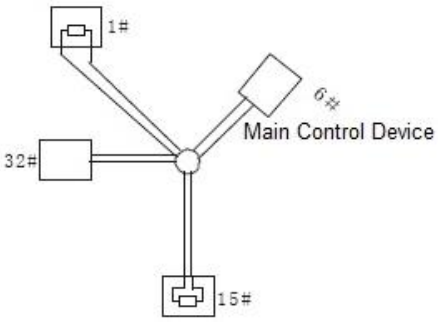

Figure 6-1

In this situation, we recommend RS485 distributor. This device can turn star type connection into the connection that conforms to RS485 bus industry standard, which can avoid the above mentioned problems and enhance communication reliability. See Figure 6-2.

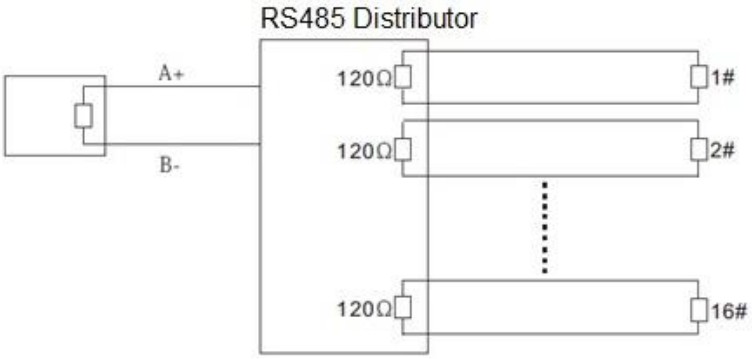

Figure 6-2

6.4 RS485 Bus FAQ

Phenomenon	Possible Reasons	Solution
Speed dome can run self-diagnosis but I cannot control it.	● Host address(baud rate) and speed dome address(baud rate) are not match; ● Positive and negative end of RS485 Bus are misconnected; ● Connection cable is loose； ● RS485 Bus connection are cut off;	● Modify host or speed dome setup ； ● Switch RS485 positive end and negative end； ● Fix connection cable firmly； ● Replace RS485 Bus.
I can control the speed dome but is not smooth	● RS485 Bus connection are not good； ● One RS485 bus is off； ● The distance between host and speed dome is too far； ● Parallel connected too much speed domes.	● Connect RS 485 Bus again； ● Replace RS485 Bus； ● Add terminal matching resistance； ● Add RS485 distributor.

7 APPENDIX III THE RELATIONSHIP BETWEEN AC 24V CABLE DIAMETER AND TRANSMISSION DISTANCE

The max transmission distance is recommended when the cable diameter is fixed and AC 24V voltage loss rate is lower than 10%. For the AC power supply devices, the max allowed voltage loss rate is 10%. For example, a device with rated power of 20W, installed 141 feet (42m) away from the transformer, the minimum wire diameter needed is 0.8000mm.

mm Feet（m） w	0.8000	1.000	1.250	2.000
5	488.52（148.90）	763.31（232.66）	1192.67（363.53）	3053.25（930.63）
10	244.26（74.45）	381.66（116.33）	596.34（181.76）	1526.62（465.31）
15	162.84（49.63）	254.44（77.55）	397.56（121.18）	1017.75（310.21）
20	122.13（37.23）	190.83（58.16）	298.17（90.88）	763.31（232.66）
25	97.70（29.78）	152.66（46.53）	238.53（72.71）	610.65（186.13）
30	81.42（24.82）	127.22（38.78）	198.78（60.59）	508.87（155.10）
35	69.79（21.27）	109.04（33.24）	170.38（51.93）	436.18（132.95）
40	61.06（18.61）	95.41（29.08）	149.08（45.44）	381.66（116.33）
45	54.28（16.54）	84.81（25.85）	132.52（40.39）	339.25（103.40）
50	48.85（14.89）	76.33（23.27）	119.27（36.35）	305.32（93.06）
55	44.41（13.54）	69.39（21.15）	108.42（33.05）	277.57（84.60）
60	40.71（12.41）	63.61（19.39）	99.39（30.29）	254.44（77.55）
65	37.58（11.45）	58.72（17.90）	91.74（27.96）	234.87（71.59）
70	34.89（10.64）	54.52（16.62）	85.19（25.97）	218.09（66.47）
75	32.57（9.93）	50.89（15.51）	79.51（24.24）	203.55（62.04）
80	30.53（9.31）	47.71（14.54）	74.54（22.72）	190.83（58.16）
85	28.74（8.76）	44.90（13.69）	70.16（21.38）	179.60（54.74）
90	27.14（8.27）	42.41（12.93）	66.26（20.20）	169.62（51.70）
95	25.71（7.84）	40.17（12.25）	62.77（19.13）	160.70（48.98）
100	24.43（7.45）	38.17（11.63）	59.63（18.18）	152.66（46.53）

8 APPENDIX IV THE RELATIONSHIP BETWEEN DC 12V CABLE DIAMETER AND TRANSMISSION DISTANCE

The max transmission distance is recommended when the cable diameter is fixed and DC 12V voltage loss rate is lower than 10%. For the DC power supply devices, the max allowed voltage loss rate is 10%. The cables used in the following table are all copper wire (the copper resistivity is $\rho = 0.0175\Omega * mm^2/m$).

mm Feet（m） w	0.8000	1.000	1.250	2.000
5	122.13 （37.23）	190.83 （58.16）	298.17 （90.88）	763.31 （232.66）
10	61.06 （18.61）	95.41 （29.08）	149.08 （45.44）	381.66 （116.33）
15	40.71 （12.41）	63.61 （19.39）	99.39 （30.29）	254.44 （77.55）
20	30.53 （9.31）	47.71 （14.54）	74.54 （22.72）	190.83 （58.16）
25	24.43 （7.45）	38.17 （11.63）	59.63 （18.18）	152.66 （46.53）
30	20.35 （6.20）	31.80 （9.69）	49.69 （15.15）	127.22 （38.78）
35	17.45 （5.32）	27.26 （8.31）	42.60 （12.98）	109.04 （33.24）
40	15.27 （4.65）	23.85 （7.27）	37.27 （11.36）	95.41 （29.08）
45	13.57 （4.14）	21.20 （6.46）	33.13 （10.10）	84.81 （28.85）
50	12.21 （3.72）	19.08 （5.82）	29.82 （9.09）	76.33 （23.27）
55	11.10 （3.38）	17.35 （5.29）	27.11 （8.26）	69.39 （21.15）
60	10.18 （3.10）	15.90 （4.85）	24.85 （7.57）	63.61 （19.39）
65	9.39 （2.86）	14.68 （4.47）	22.94 （6.99）	58.72 （17.90）
70	8.72 （2.66）	13.63 （4.15）	21.30 （6.49）	54.52 （16.62）
75	8.14 （2.48）	12.72 （3.88）	19.88 （6.06）	50.89 （15.51）
80	7.63 （2.33）	11.93 （3.64）	18.64 （5.68）	47.71 （14.54）
85	7.18 （2.19）	11.23 （3.42）	17.54 （5.35）	44.90 （13.69）
90	6.78 （2.07）	10.60 （3.23）	16.56 （5.05）	42.41 （12.93）
95	6.43	10.04	15.69	40.17

mm Feet（m） w	0.8000	1.000	1.250	2.000
	（1.96）	（3.06）	（4.78）	（12.25）
100	6.11 （1.86）	9.54（2.91）	14.91 （4.54）	38.17 （11.63）

9 APPENDIX V WIRE GAUGE REFERENCE SHEET

Metric bare wire diameter （mm）	AWG	SWG	Bare wire cross section （mm^2）
0.050	43	47	0.00196
0.060	42	46	0.00283
0.070	41	45	0.00385
0.080	40	44	0.00503
0.090	39	43	0.00636
0.100	38	42	0.00785
0.110	37	41	0.00950
0.130	36	39	0.01327
0.140	35	/	0.01539
0.160	34	37	0.02011
0.180	33	/	0.02545
0.200	32	35	0.03142
0.230	31	/	0.04115
0.250	30	33	0.04909
0.290	29	31	0.06605
0.330	28	30	0.08553
0.350	27	29	0.09621
0.400	26	28	0.1257
0.450	25	/	0.1602
0.560	24	24	0.2463
0.600	23	23	0.2827
0.710	22	22	0.3958
0.750	21	/	0.4417
0.800	20	21	0.5027
0.900	19	20	0.6362
1.000	18	19	0.7854
1.250	16	18	1.2266
1.500	15	/	1.7663
2.000	12	14	3.1420
2.500	/	/	4.9080
3.000	/	/	7.0683

Note

- This manual is for reference only. Slight difference may be found in the user interface.
- All the designs and software here are subject to change without prior written notice.
- All trademarks and registered trademarks are the properties of their respective owners.
- If there is any uncertainty or controversy, please refer to the final explanation of us.
- Please visit our website or contact your local service engineer for more information.