HD IR Waterproof Fixed Network Camera User’s Manual

Version 1.1.1

Welcome

Thank you for purchasing our network camera!
This user’s manual is designed to be a reference tool for your system.
Please read the following safeguard and warnings carefully before you use this series product!
Please keep this user’s manual well for future reference!

Important Safeguards and Warnings

1．Electrical safety

All installation and operation here should conform to your local electrical safety codes.
The power shall conform to the requirement in the SELV (Safety Extra Low Voltage) and the Limited power source is rated 12V DC or 24V AC in the IEC60950-1. (Refer to general introduction) **Please note: Do not connect two power supplying sources to the device at the same time; it may result in device damage! The product must be grounded to reduce the risk of electronic shock.**
We assume no liability or responsibility for all the fires or electrical shock caused by improper handling or installation.
We are not liable for any problems caused by unauthorized modification or attempted repair.

2．Transportation security

Heavy stress, violent vibration or water splash are not allowed during transportation, storage and installation.

3．Installation

Do not apply power to the camera before completing installation.
Please install the proper power cut-off device during the installation connection.
Always follow the instruction guide the manufacturer recommended.

4．Qualified engineers needed

All the examination and repair work should be done by the qualified service engineers.
We are not liable for any problems caused by unauthorized modifications or attempted repair.

5．Environment

This series network camera should be installed in a cool, dry place away from direct sunlight, inflammable, explosive substances and etc.
Please keep it away from the electromagnetic radiation object and environment.
Please make sure the CCD (CMOS) component is out of the radiation of the laser beam device. Otherwise it may result in CCD (CMOS) optical component damage.
Please keep the sound ventilation.
Do not allow the water and other liquid falling into the camera.
Thunder-proof device is recommended to be adopted to better prevent thunder.
The grounding studs of the product are recommended to be grounded to further enhance the reliability of the camera.

6. Daily Maintenance

Please shut down the device and then unplug the power cable before you begin daily maintenance work.

Do not touch the CCD (CMOS) optic component. You can use the blower to clean the dust on the lens surface.
Always use the dry soft cloth to clean the device. If there is too much dust, please use the water to dilute the mild detergent first and then use it to clean the device. Finally use the dry cloth to clean the device.
Please put the dustproof cap to protect the CCD (CMOS) component when you do not use the camera.
Dome enclosure is the optical component, do not touch the enclosure when you are installing the device or clean the enclosure when you are doing maintenance work. Please use professional optical clean method to clean the enclosure. Improper enclosure clean method (such as use cloth) may result in poor IR effect of camera with IR function.

7. Accessories

Be sure to use all the accessories recommended by manufacturer.
Before installation, please open the package and check all the components are included.
Contact your local retailer ASAP if something is broken in your package.

Accessory Name	Amount
Network Camera Unit	1
Quick Start Guide	1
Installation Accessories Bag	1
12V to 24V Conversion Cable (For AC 24V series product only)	1
CD	1

Table of Contents

1 General Introduction 1

1.1 Overview 1
1.2 Features 1
1.3 Specifications 2
1.3.1 Performance 2

2 Framework 4

2.1 Multiple-function Combination Cable 4
2.2 Framework and Dimension 5
2.3 Bidirectional talk 6
2.3.1 Device-end to PC-end 6
2.3.2 PC-end to the device-end 6
2.4 Alarm Setup 6

3 Device Installation 8

3.1 Device Installation 8
3.2 Install Micro SD Card 8
3.3 Adjust Lens 9
3.4 Adjust Bracket 10
3.5 Button 11

4 Quick Configuration Tool 13

4.1 Overview 13
4.2 Operation 13

5 Web Operation 15

5.1 Network Connection 15
5.2 Login and Main Interface 15

6 FAQ 17

Appendix Toxic or Hazardous Materials or Elements 18

1 General Introduction

1.1 Overview

This series network camera integrates the traditional camera and network video technology. It adopts audio and video data collection, transmission together. It can connect to the network directly without any auxiliary device.

This series network camera uses standard H.264 video compression technology and G.711a audio compression technology, which maximally guarantee the audio and video quality.

It supports the IR night vision function. In the night environments, the device can use the IR light to highlight the object which is suitable for the surveillance function in the low illumination environments. The built-in protection enclosure and waterproof design conforms to the IP 66 level. It has the sound waterproof function suitable for use in the outdoor environments.

It supports real-time monitor and listening at the same time. It supports analog video output and dual-way bidirectional talk.

It can be used alone or used in a network area. When it is used lonely, you can connect it to the network and then use a network client-end. Due to its multiple functions and various uses, this series network camera is widely used in many environments such office, bank, road monitor and etc.

1.2 Features

User Management	● Different user rights for each group, one user belongs to one group. ● The user right shall not exceed the group right.
Storage Function	● Support central server backup function in accordance with your configuration and setup in alarm or schedule setting ● Support record via Web and the recorded file are storage in the client-end PC. ● Support built-in SD card. ● Do not support local SD card hot swap storage function. Support short-time storage when encounter disconnection. ● Support network storage function such as FTP.
Alarm Function	● Real-time respond to external on-off alarm input, and video detect as user pre-defined activation setup and generate corresponding message in screen and audio prompt(allow user to pre-record audio file) ● Real-time video detect: motion detect, tampering.
Network Monitor	● Network camera supports one-channel audio/video data transmit to network terminal and then decode. Delay is within 270ms (network bandwidth support needed) ● Max supports 20 connections. ● Adopt the following audio and video transmission protocol: HTTP, TCP, UDP, MULTICAST, RTP/RTCP, RTSP and etc. ● Support web access.
Network Management	● Realize network camera configuration and management via Ethernet. ● Support device management via web or client-end.
Power	● External power adapter DC12V/AC 24V. You can select according to your actual environments. Please note system can not support these two types of power supplying at the same time.

Assistant Function	● Log function ● Support system resource information and running status real-time display. ● Day/Night mode auto switch. ● Built-in IR light. Support IR night vision. ● Support picture parameter setup such as electronic shutter and gain setup. ● Backlight compensation: screen auto split to realize backlight compensation to adjust the bright. ● Support video watermark function to avoid vicious video modification. ● The enclosure conforms to the IP 66 protection. Has the waterproof function.

1.3 Specifications

1.3.1 Performance

Please refer to the following sheet for network camera performance specification.

Parameter \ Model		ICIP B2000AF
System	Main Processor	High performance DSP
	OS	Embedded LINUX
	System Resources	Support real-time network, local record, and remote operation at the same time.
	User Interface	Remote operation interface such as WEB, DSS, PSS
	System Status	Micro SD card status, bit stream statistics, log, and software version.
Video Parameter	Image Sensor	1/2.8-inch CCD
	Pixel	1920(H)*1080(V)
	Day/Night Mode	Support day/night mode switch and IR-CUT at the same time.
	Auto Aperture	Enable
	Gain Control	Fixed/Auto
	White Balance	Manual/Auto
	BLC	Off/BLC(default or custom)/WDR (0-100 adjustable)/HLC(0-100 adjustable)
	Exposure Mode	Manual/Auto It ranges from 1/3 to 1/100000.
	Video Compression Standard	H.264/H.264H/MJPEG
	Video Frame Rate	PAL: Main stream (1920*1080@25fps) extra stream 1 (704*576@25fps) extra stream 2 1280*720@11fps)
		NTSC: Main stream (1920*1080@30fps) extra stream 1 (704*480@30fps) extra stream 2 1280*720@1fps)
		Note: Extra stream 2's actual frame rate depends on device max capacity set which can be adjusted within its range.
	Video Bit Rate	H.264H: 40-8192Kbps adjustable MJPEG: 40-16384Kbps adjustable and bit rate is adjustable. Support customized setup.
	Video Flip	Support mirror and flip function.
	Snapshot	Max 1f/s snapshot. File extension name is JPEG.

	Privacy Mask	Supports max 4 privacy mask zones
	Video Setup	Support parameter setup such as bright, contrast.
	Video Information	Channel title, time title, motion detect, tampering, overlay.
	Lens	Manual 3.3~12mm@F1.4(subject to actual product)
	Lens Interface	Φ14. Lens is the default accessories
Audio	**Audio Input**	1-channel,RCA
	Audio Output	1-channel, RCA
	Bidirectional Talk Input	Reuse the first audio input channel
	Audio Bit Rate	8kbps 16bit or 16kbps 16bit
	Audio Compression Standard	G.711A/G.711Mu
Video	**Motion Detect**	396 (18*22) detection zones; sensitivity level ranges from 0 to 100; area threshold ranges from 0 to 100. Activation event: video storage, image snapshot, log, email function and etc.
Alarm Input		2-channel input,1-channel output
Record and Backup	**Record Priority**	Manual>External alarm >Video detect>Schedule
	Storage Management	Support Micro SD card, NAS storage
Network	**Wire Network**	1-channel wire Ethernet port, 10/100 Base-T Ethernet
	Network Protocol	Standard HTTP, TCP/IP, ARP, IGMP, ICMP, RTSP, RTP,UDP, RTCP, SMTP, FTP, DHCP, DNS, DDNS, PPPOE, UPNP, NTP, Bonjour, SNMP, QoS, 802.1x
	Protocol	PSIA, ONVIF
	Remote Operation	Monitor, system setup, file download, log information, maintenance , upgrade and etc
AUX Interface	**Video Output**	1-channel analog video output,BNC port
	Reset	Reset button
General Parameter	**Power**	AC 24V/PoE or DC 12V/PoE
	Power Consumption	7.5W MAX (-H series≤9W)
	Working Temperature	-30℃~+60℃(-H: -40° ~60°)
	Working Humidify	≤95%
	Dimensions(mm)	φ104×306.7
	Weight	1250g(Excluding box)
	Installation	Bracket is included as default.
	IR Distance	20~30m
	Protection Level	IP66
	Note	Model with “-H” means it has electrical heating, otherwise, it does not have. (Subject to actual product)

2 Framework

2.1 Multiple-function Combination Cable

You can refer to the following figure for multiple-function combination cable information. See Figure 2-1.

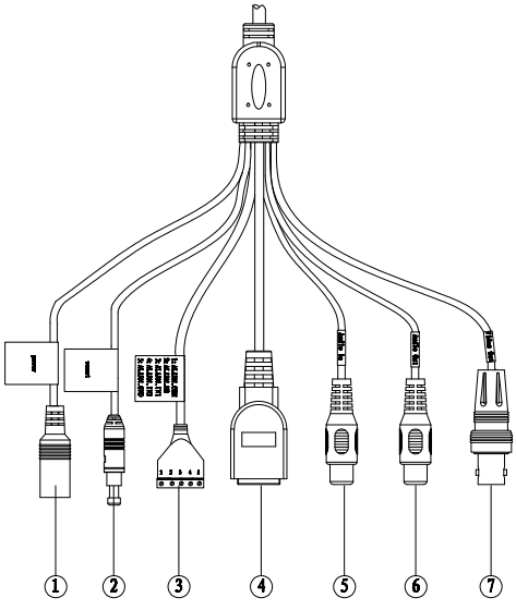

Figure 2-1 Multiple-function combination cable

Please refer to the following sheet for detailed information.

SN	Port Name	Function	Connection	Note
1	DC12V/AC24V	Power input port	/	Power port. Input DC 12V or AC 24V. (convertor is required) **Note:** **Please refer to actual device label.**
2	RESET	Reset button	/	The reset button is to restore device factory default setup. Press 3~5 seconds.
3	I/O	I/O cable port	/	Includes alarm input and output.
4	LAN	Network port	Ethernet port	● Connect to standard Ethernet cable.
5	AUDIO IN	Audio input port	RCA	Input audio signal. It can receive the analog audio signal from the pickup.
6	AUDIO OUT	Audio output port	RCA	Output audio signal to the devices such as the sound box.
7	VIDEO OUT	Video output port	BNC	Output analog video signal. It can connect to the TV monitor to view the video.

Please refer to the follow sheet for detailed pin information.

Port Name	SN	Name	Note
I/O Port	1	ALARM_COM	Alarm output public port.
	2	ALARM_NO	Alarm output port. It is to output the alarm signal to the alarm device. NO: normal open alarm output port. It shall work with ALARM_COM port.
	3	ALARM_IN1	Alarm input port 1. It is to receive the on-off signal from the external alarm source.
	4	ALARM_IN2	Alarm input port 2. It is to receive the on-off signal from the external alarm source.
	5	GND	Ground port

2.2 Framework and Dimension

Please refer to the following figure for dimension information. The unit is mm. See Figure 2-2 and Figure 2-3.

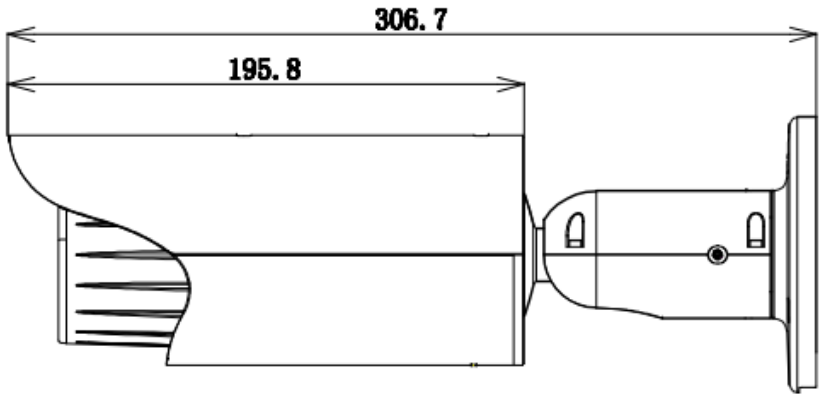

Figure 2-2 Dimension illustration 1

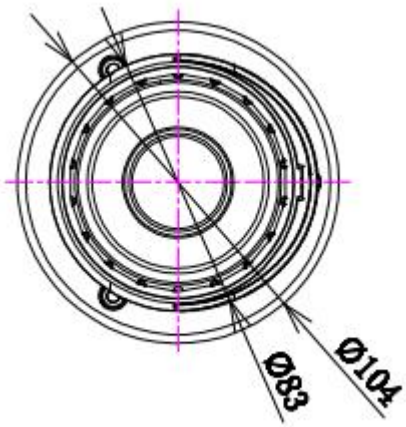

Figure 2-3 Dimension illustration 2

2.3 Bidirectional talk

2.3.1 Device-end to PC-end

Device Connection

Please connect the speaker or the MIC to the audio input port of the device. Then connect the earphone to the audio output port of the PC.

Login the Web and then click the Talk button to enable the bidirectional talk function.

You can see the button becomes orange after you enabled the bidirectional talk function.

Click Talk button again to stop the bidirectional talk function.

Listening Operation

At the device end, speak via the speaker or MIC, and then you can get the audio from the earphone or sound box at the pc-end.

2.3.2 PC-end to the device-end

Device Connection

Connect the speaker or the MIC to the audio input port of the PC and then connect the earphone to the audio output port of the device.

Login the Web and then click the Talk button to enable the bidirectional talk function.

You can see the button becomes orange after you enabled the audio talk function.

Click Talk button again to stop the bidirectional talk function.

Please note the on-site listening operation is null during the bidirectional talk process.

Listening Operation

At the PC-end, speak via the speaker or MIC, and then you can get the audio from the earphone or sound box at the device-end.

2.4 Alarm Setup

The alarm interface is shown as in Figure 2-4. Please follow the steps listed below for local alarm input and output connection.

1) Connect the alarm input device to the alarm input port (No.3 pin or No.4 pin) of the I/O cable.

2) Connect the alarm output device to the alarm output port (No.2 pin) and alarm output public port (No.1 pin). The alarm output port supports NO (normal open) alarm device only.

3) Open the Web, go to the Figure 2-4. Please set the alarm input 01 port for the first channel of the I/O cable (No.3 pin). The alarm input 02 is for the 2nd channel of I/O cable (No.4 pin). Then you can select the corresponding type (NO/NC.)

4) Set the WEB alarm output. The alarm output 01 is for the alarm output port of the device. It is the No.2 pin of the I/O cable.

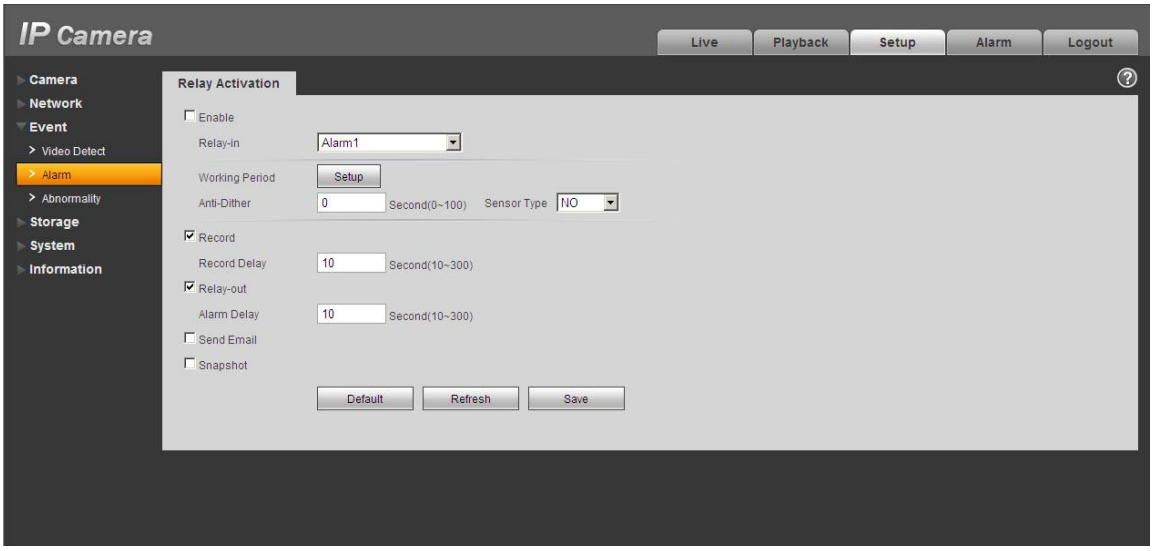

Figure 2-4 Alarm

Please refer to the following figure for alarm input information. See Figure 2-5.

Alarm input: When the input signal is idle or grounded, the device can collect the different statuses of the alarm input port. When the input signal is connected to the 5V or is idle, the device collects the logic “1”. When the input signal is grounded, the device collects the logic “0”.

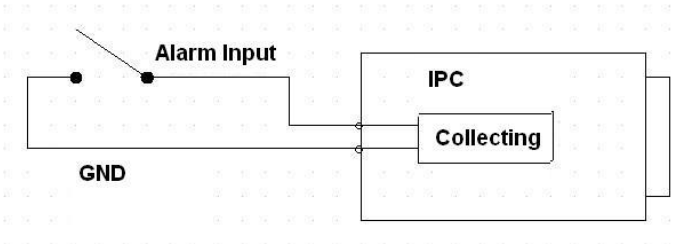

Figure 2-5 Alarm input

Please refer to the following figure for alarm output information. See Figure 2-6.

Port NO and Port C composes an on-off button to provide the alarm output.

If the type is NO, this button is normal open. The button becomes on when there is an alarm output.

If the type is NC, this button is normal off. The button becomes off when there is an alarm output.

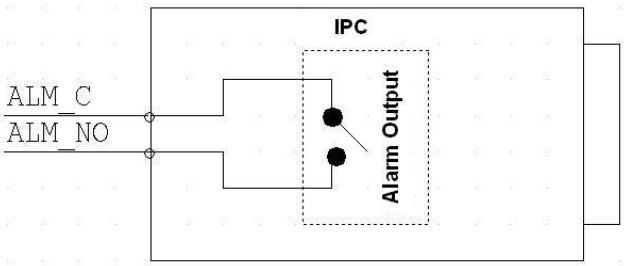

Figure 2-6 Alarm output

3 Device Installation

3.1 Device Installation

Please follow the steps listed below to install the device. Please refer to Figure 3-1 for reference.

- Dig three holes in the wall or the surface, and then input the three expansion bolts to the holes and secure.
- Put the three fixed holes of the bottom of the bracket to the three holes you just dug in the wall or surface. Put the three fixed screws to the three holes of the bracket and then secure firmly. Finally you can fix the bracket in the wall or surface.

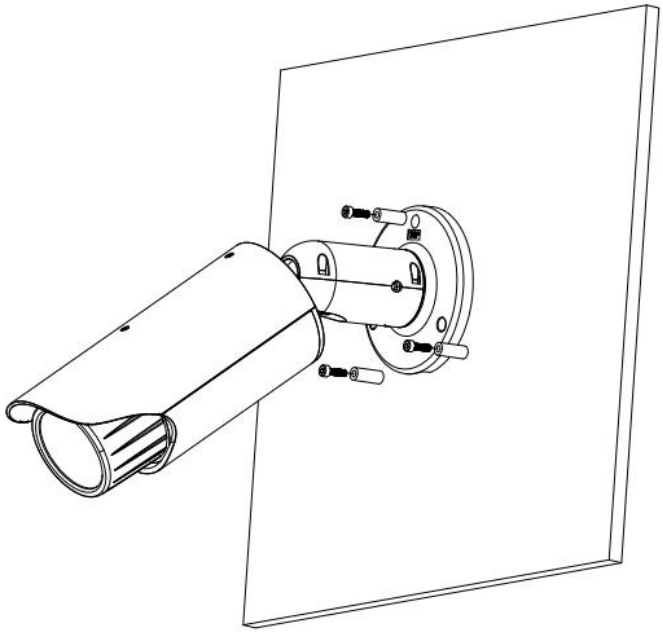

Figure 3-1 Device installation illustration

3.2 Install Micro SD Card

Step 1. Rotate front cover counterclockwise and take it down, and you can see SD card clot.

Step 2. Insert Micro-SD card into SD card slot according to Figure 2-2.

Step 3. Put back front cover by clockwise rotating.

Note:

Please properly install Micro SD card, otherwise, may cause SD card error.

Please properly put back the front cover for waterproof purpose.

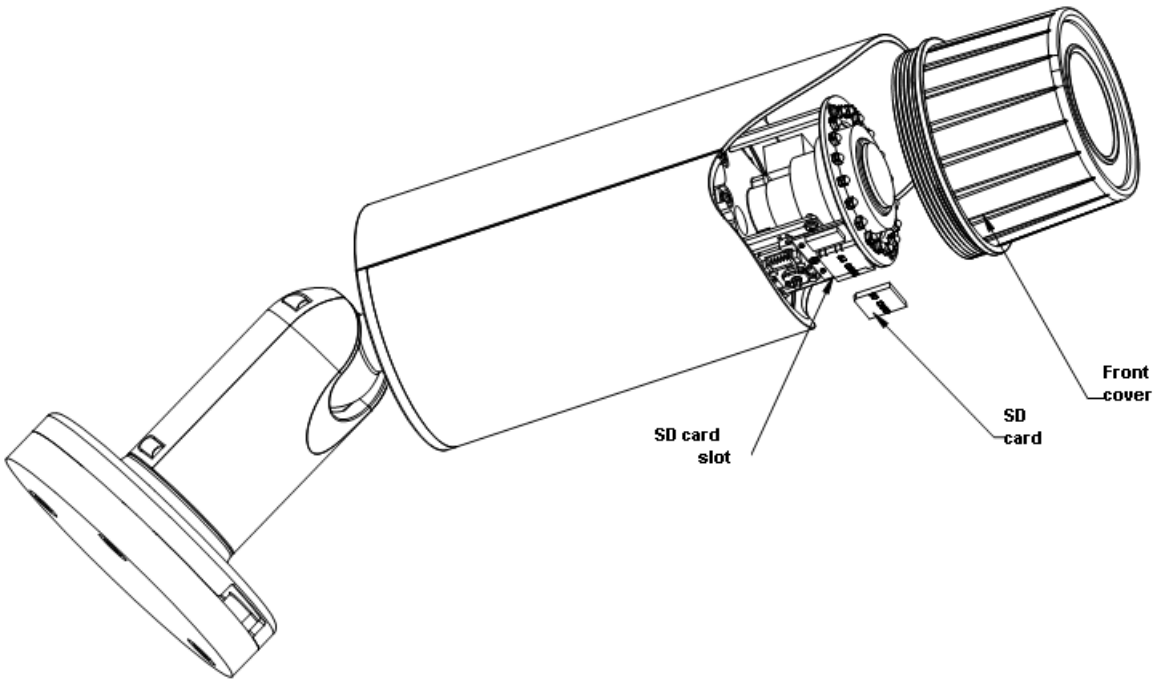

Figure 3-2 Micro-SD card

3.3 Adjust Lens

Rotate lens counterclockwise, and take it down. You can see its front and rear adjusting rod. Front rod adjusts focus while rear rod adjusts zoom. After adjusting rod, rotate lens cover clockwise to fasten it. See Figure 2-3.

Note:

- If you cannot rotate lens cover, you can take down sunshield first.
- Please properly put back the front cover for waterproof purpose.
- Motorized series device has default motorized lens which do not need manual adjustment.

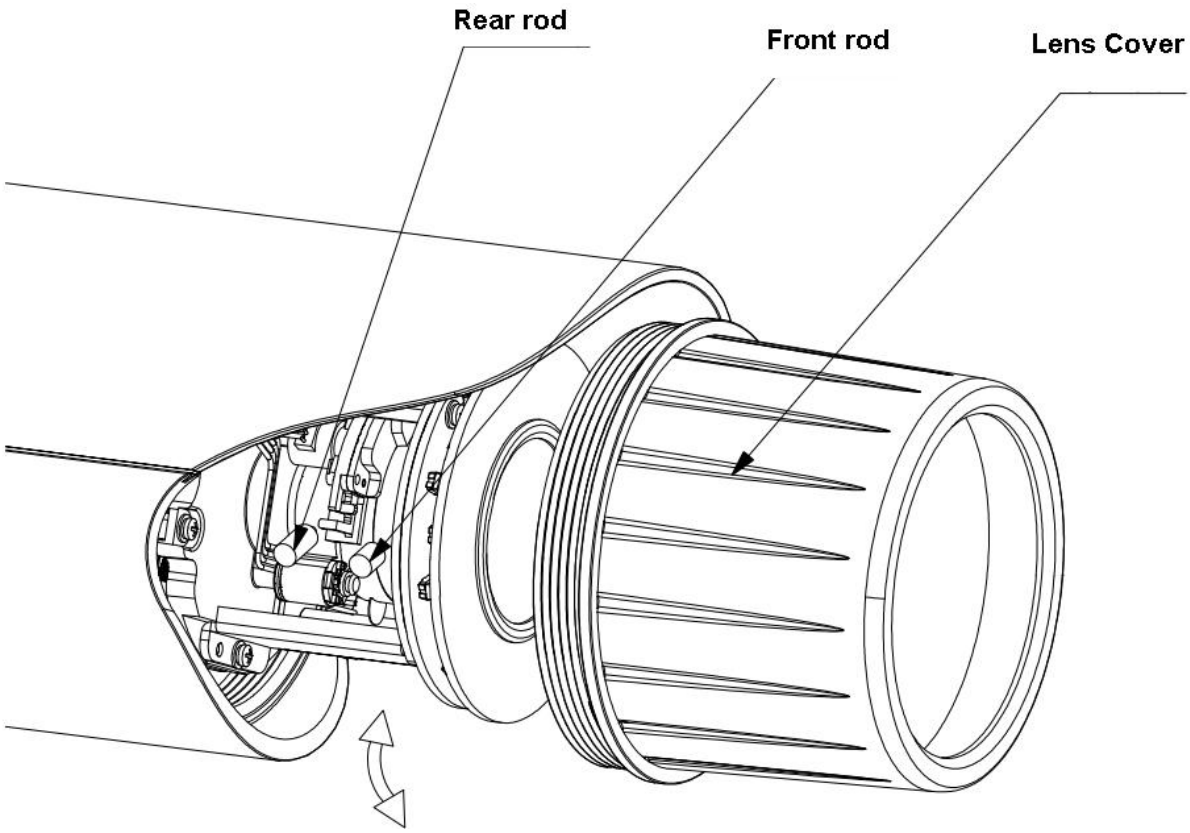

Figure 3-3 Adjusting lens

3.4 Adjust Bracket

You adjust bracket with a M4 inner hex screw. Before adjustment, you loosen the screw with inner hex wrench in accessories bag. Rotate rear cover 360° horizontally, and 90° vertically. Rotate pedestal 360° .

Secure the screw with inner hex wrench after adjustment. See Figure 2-4.

Note:

M4 inner hex wrench must be secured, otherwise the pedestal will be unstable and device cannot be fixed to specific angle.

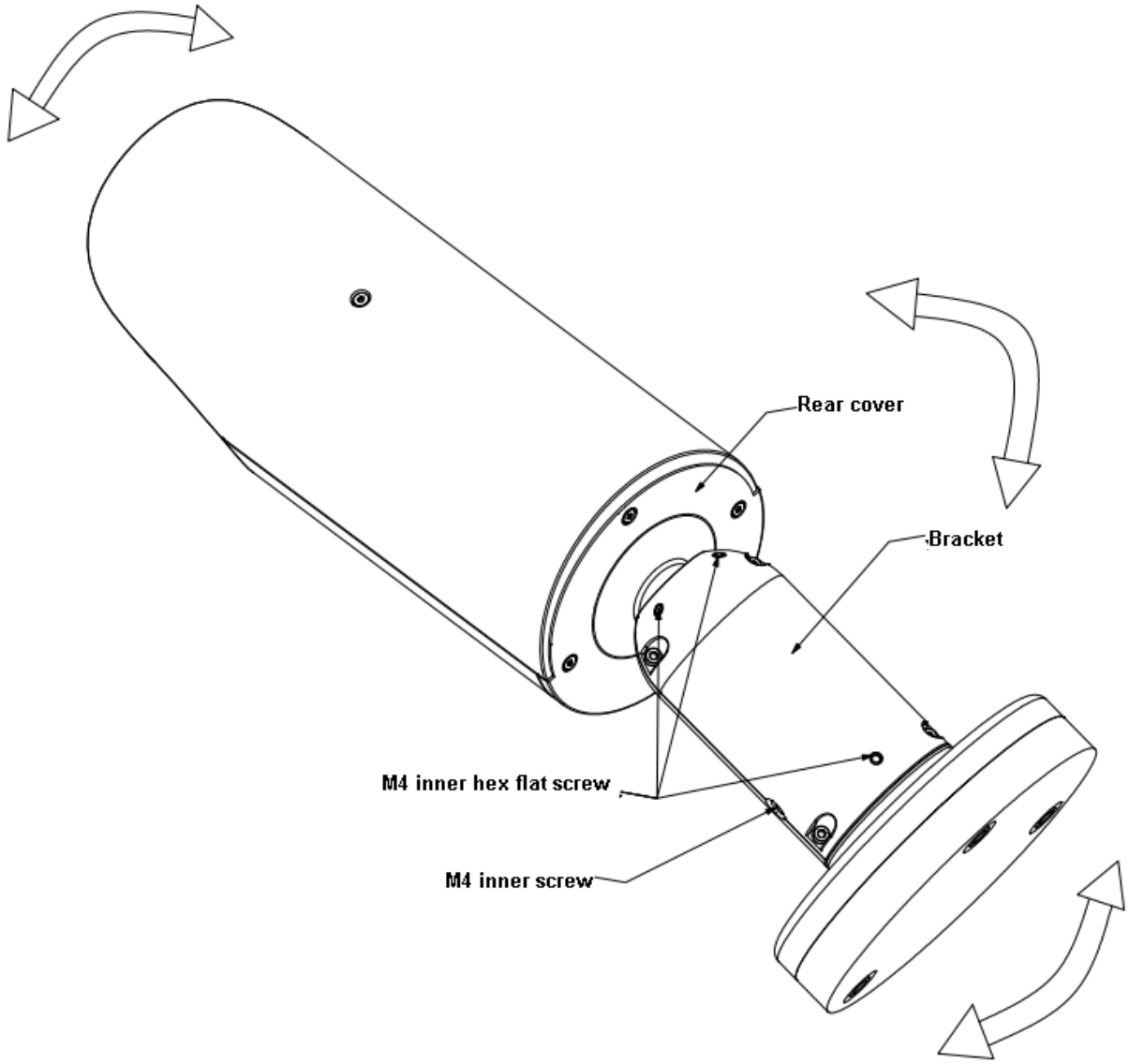

Figure 3-4 Adjusting bracket

3.5 Button

You can switch button to up/down to zoom in/out. You also can switch button to left/right to focus. Long press button for 2s for auto focus which makes video clear. See Figure 2-5 and 2-6.

Note:
The button is for motorized series only.

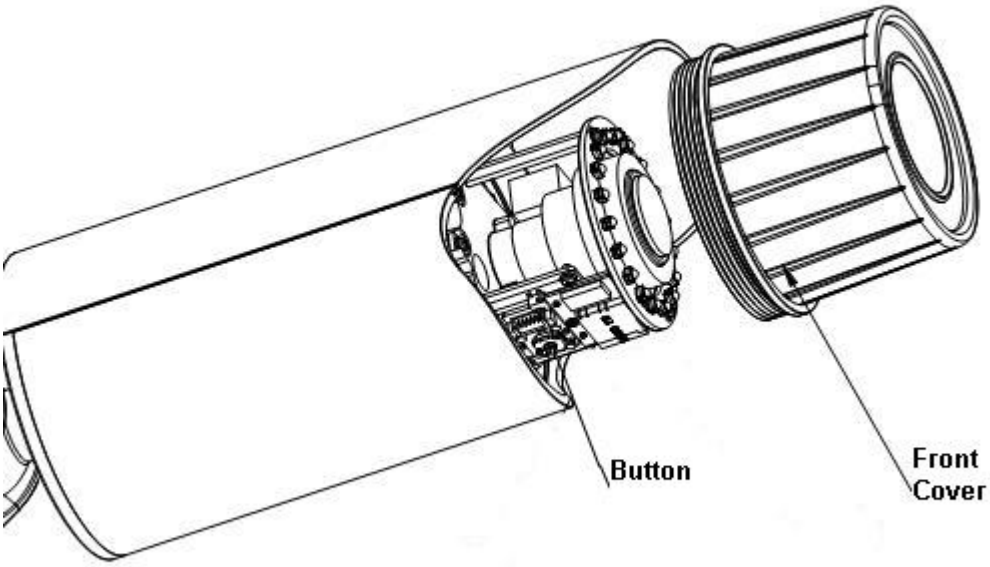

Figure 3-5 Button Position

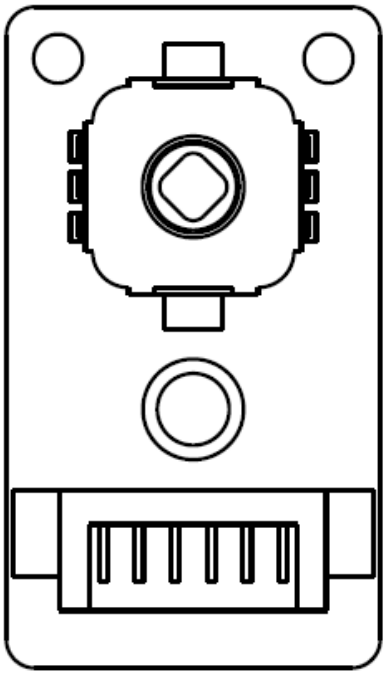

Figure 3-6 Button

4 Quick Configuration Tool

4.1 Overview

Quick configuration tool can search current IP address, modify IP address. At the same time, you can use it to upgrade the device.
Please note the tool only applies to the IP addresses in the same segment.

4.2 Operation

Double click the “ConfigTools.exe” icon, you can see an interface is shown as in Figure 4-1.
In the device list interface, you can view device IP address, port number, subnet mask, default gateway, MAC address and etc.

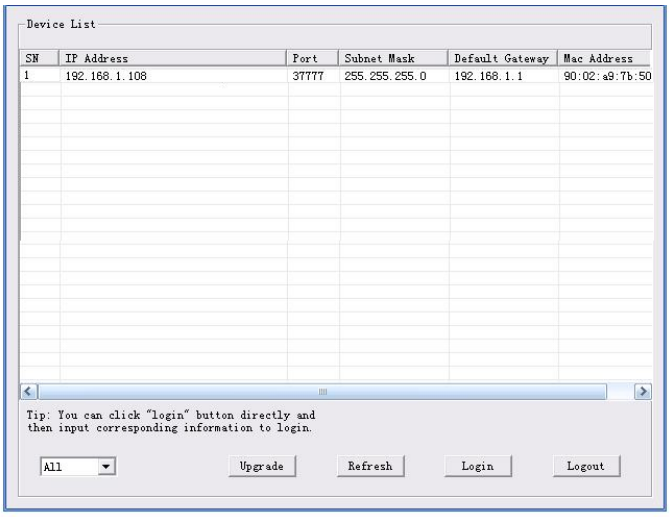

Figure 4-1 Search interface

Select one IP address and then right click mouse, you can see an interface is shown as in Figure 4-2.
Select the “Open Device Web” item; you can go to the corresponding web login interface.

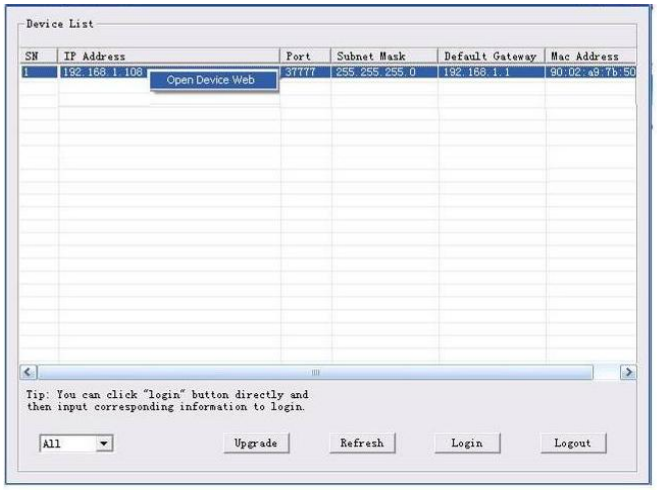

Figure 4-2 Search interface 2

If you want to modify the device IP address without logging in the device web interface, you can go to the configuration tool main interface to set.

In the configuration tool search interface (Figure 4-1), please select a device IP address and then double click it to open the login interface. Or you can select an IP address and then click the Login button to go to the login interface. See Figure 4-3.

In Figure 4-3, you can view device IP address, user name, password and port. Please modify the corresponding information to login.

Please note the port information here shall be identical with the port value you set in TCP port in Web Network interface. Otherwise, you cannot login the device.

If you are using device background upgrade port 3800 to login, other setups are all invalid.

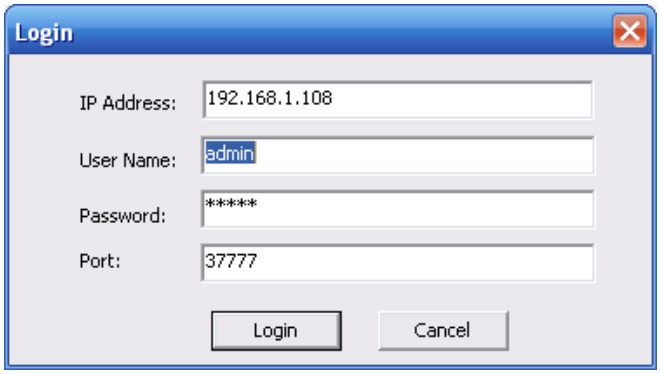

Figure 4-3 Login prompt

After you logged in, the configuration tool main interface is shown as below. See Figure 4-4.

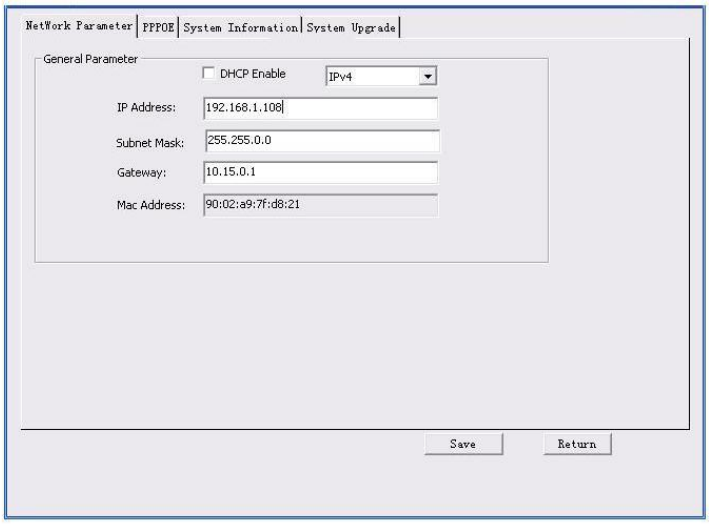

Figure 4-4 Main interface

For detailed information and operation instruction of the quick configuration tool, please refer to the *Quick Configuration Tool User's Manual* included in the resources CD.

5 Web Operation

This series network camera products support the Web access and management via PC.
Web includes several modules: Monitor channel preview, system configuration, alarm and etc.

5.1 Network Connection

Please follow the steps listed below for network connection.

- Make sure the network camera has connected to the network properly.
- Please set the IP address, subnet mask and gateway of the PC and the network camera respectively. Network camera default IP address is 192.168.1.108. Subnet mask is 255.255.255.0. Gateway is 192.168.1.1
- Use order ping ***.***.***.***(* network camera address) to check connection is OK or not.

5.2 Login and Main Interface

Open IE and input network camera address in the address bar. See Figure 5- 1.

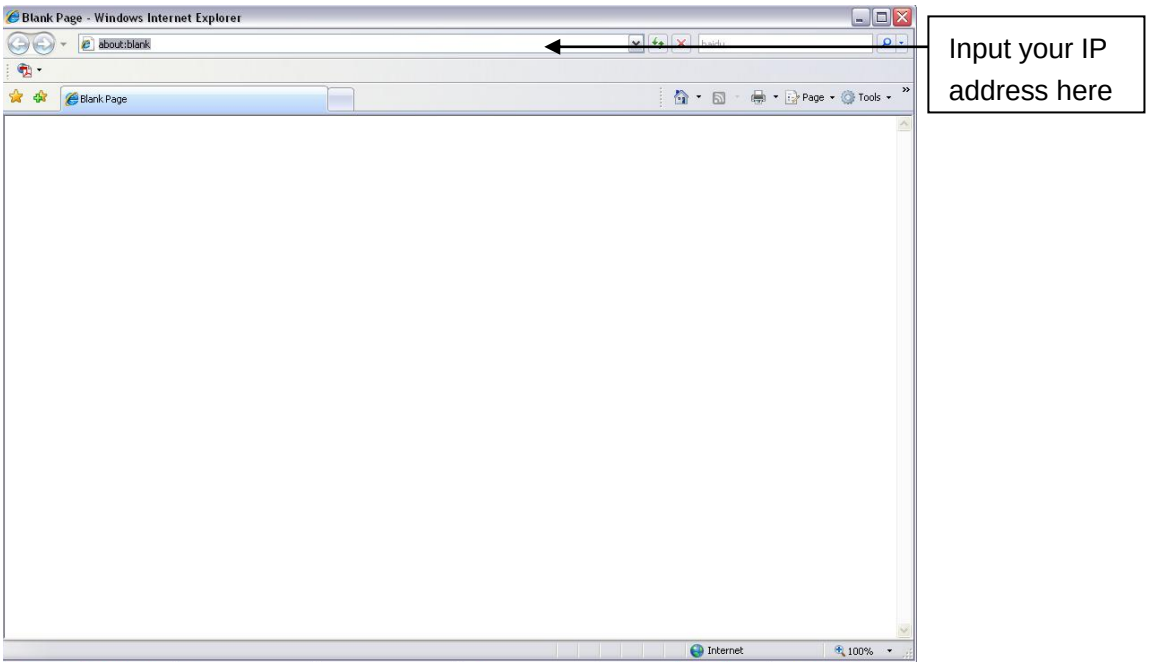

Figure 5- 1 IP address

The login interface is shown as below. See Figure 5- 2.
Please input your user name and password.
Default factory name is admin and password is admin.
Note: For security reasons, please modify your password after you first login.

Figure 5- 2 Web login

After you successfully logged in, please install WEB plug-in unit. Please refer to the Web Operation Manual included in the resource CD for detailed operation instruction.
See Figure 5- 3.

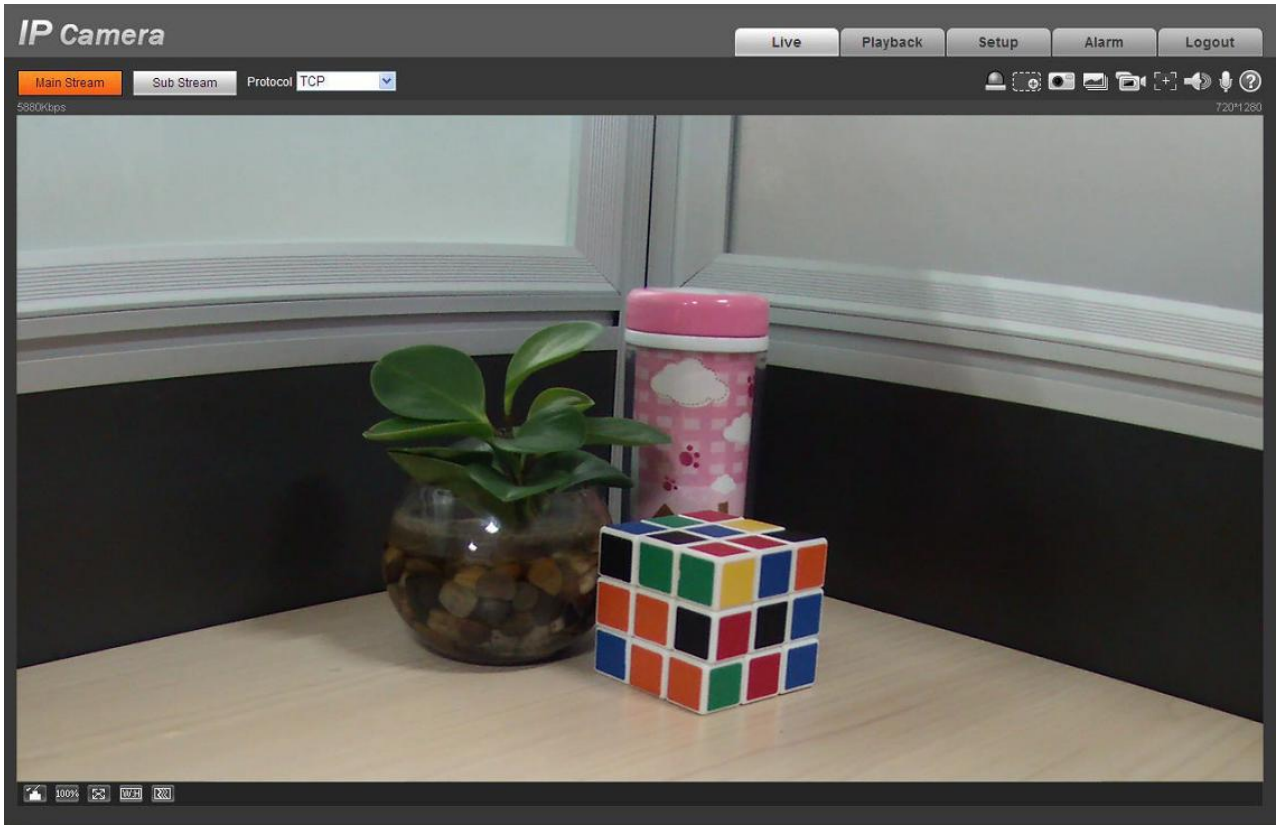

Figure 5- 3 Web monitoring window

6 FAQ

Bug	
I can not boot up the device.	Please click RESET button for at least five seconds to restore factory default setup.
Micro SD card write times	Do not set the Micro SD card as the storage media to storage the schedule record file. It may damage the Micro SD card duration.
I can not use the disk as the storage media.	When disk information is shown as hibernation or capacity is 0, please format it first (Via Web).
I can not upgrade the device via network.	When network upgrade operation failed, you can use port 3800 to continue upgrade.
Recommended Micro SD card brand	Support Micro SD card, we recommend 4GB or higher industry-level high speed card.
Audio function	Please use active device for the audio monitor input, otherwise there is no audio in the client-end.
To guarantee setup update	After you modified the important setup, please reboot the device via the software to make sure the setup has been updated to the storage medium.
Power adapter	The general power adapter included in the accessories bag can work ranging from 0℃ to 40 ℃. The device may result in unstable power supply when the temperature exceeds the working temperature. Please replace an industry-level power adapter if you are using in the harsh environments.
Rear bracket is not stable	The rear bracket requires to be tightened with a S3 inner hex wrench, and user shall manually check if it is fastened or not.
SD card reading error	Re-plug in SD card, if it still does not work, the SD card may be damaged.

Appendix Toxic or Hazardous Materials or Elements

Component Name	Toxic or Hazardous Materials or Elements					
	Pb	Hg	Cd	Cr VI	PBB	PBDE
Circuit Board Component	○	○	○	○	○	○
Device Construction Material	○	○	○	○	○	○
Wire and Cable	○	○	○	○	○	○
Packing Components	○	○	○	○	○	○
Accessories	○	○	○	○	○	○

O: Indicates that the concentration of the hazardous substance in all homogeneous materials in the parts is below the relevant threshold of the SJ/T11363-2006 standard.

X: Indicates that the concentration of the hazardous substance of at least one of all homogeneous materials in the parts is above the relevant threshold of the SJ/T11363-2006 standard. During the environmental-friendly use period (EFUP) period, the toxic or hazardous substance or elements contained in products will not leak or mutate so that the use of these (substances or elements) will not result in any severe environmental pollution, any bodily injury or damage to any assets. The consumer is not authorized to process such kind of substances or elements, please return to the corresponding local authorities to process according to your local government statutes。

Note

- **This user's manual is for reference only. Slight difference may be found in user interface.**
- **All the designs and software here are subject to change without prior written notice.**
- **If there is any uncertainty or controversy, please refer to the final explanation of us.**
- **Please visit our website for more information.**
- **All trademarks and registered trademarks are the properties of their respective owners.**