HD IR Waterproof Fixed Network Camera User's Manual

Version 1.0.0

Welcome

Thank you for purchasing our network camera!
This user’s manual is designed to be a reference tool for your system.
Please read the following safeguard and warnings carefully before you use this series product!
Please keep this user’s manual well for future reference!

Important Safeguards and Warnings

1．Electrical safety

All installation and operation here should conform to your local electrical safety codes.
The power shall conform to the requirement in the SELV (Safety Extra Low Voltage) and the Limited power source is rated 12V DC in the IEC60950-1. This series product supports PoE too. **Please note: Do not connect these two power supplying sources to the device at the same time; it may result in device damage!**
We assume no liability or responsibility for all the fires or electrical shock caused by improper handling or installation.
We are not liable for any problems caused by unauthorized modification or attempted repair.

2．Transportation security

Heavy stress, violent vibration or water splash are not allowed during transportation, storage and installation.

3．Installation

Do not apply power to the camera before completing installation.
Please install the proper power cut-off device during the installation connection.
Always follow the instruction guide the manufacturer recommended.

4．Qualified engineers needed

All the examination and repair work should be done by the qualified service engineers.
We are not liable for any problems caused by unauthorized modifications or attempted repair.

5．Environment

This series network camera should be installed in a cool, dry place away from direct sunlight, inflammable, explosive substances and etc.
Please keep it away from the electromagnetic radiation object and environment.
Please make sure the CCD (CMOS) component is out of the radiation of the laser beam device. Otherwise it may result in CCD (CMOS) optical component damage.
Please keep the sound ventilation.
Do not allow the water and other liquid falling into the camera.
Thunder-proof device is recommended to be adopted to better prevent thunder.
The grounding studs of the product are recommended to be grounded to further enhance the reliability of the camera.

6. Daily Maintenance

Please shut down the device and then unplug the power cable before you begin daily maintenance work.

Do not touch the CCD (CMOS) optic component. You can use the blower to clean the dust on the lens surface.
Always use the dry soft cloth to clean the device. If there is too much dust, please use the water to dilute the mild detergent first and then use it to clean the device. Finally use the dry cloth to clean the device.
Please put the dustproof cap to protect the CCD (CMOS) component when you do not use the camera.

7. Accessories

Be sure to use all the accessories recommended by manufacturer.
Before installation, please open the package and check all the components are included.
Contact your local retailer ASAP if something is broken in your package.

Accessory Name	Amount
Network Camera Unit	1
Quick Start Guide	1
Installation Accessories Bag	1
CD	1

Table of Contents

1 General Introduction 1

1.1 Overview 1

1.2 Features 1

1.3 Specifications 2

1.3.1 Performance 2

1.3.2 Factory Default Setup 3

2 Structure 9

2.1 Multiple-function Combination Cable 9

2.2 Framework and Dimension 9

3 Device Installation 11

4 Quick Configuration Tool 13

4.1 Overview 13

4.2 Operation 13

5 Web Operation 16

5.1 Network Connection 16

5.2 Login and Logout 16

6 FAQ 19

Appendix Toxic or Hazardous Materials or Elements 20

1 General Introduction

1.1 Overview

This series network camera integrates the traditional camera and network video technology. It adopts video data collection, transmission together. It can connect to the network directly without any auxiliary device.

This series network camera uses standard H.264 video compression technology, which maximally guarantees the video quality.

It supports the IR night vision function. In the night environments, the device can use the IR light to highlight the object which is suitable for the surveillance function in the low illumination environments. The waterproof design conforms to the IP 66 level. It has the sound waterproof function suitable for use in the outdoor environments.

It can be used alone or used in a network area. When it is used lonely, you can connect it to the network and then use a network client-end. Due to its multiple functions and various uses, this series network camera is widely used in many environments such office, bank, road monitor and etc.

1.2 Features

User Management	● Different user rights for each group, one user belongs to one group. ● The user right shall not exceed the group right.
Storage Function	● Support central server backup function in accordance with your configuration and setup in alarm or schedule setting ● Support record via Web and the recorded file are storage in the client-end PC. ● Support network storage function such as FTP.
Network Monitor	● It supports one-channel video data transmit to network terminal and then decode. Delaying time is within 270ms (network bandwidth support needed) ● Max supports 20 connections and output bandwidth is 32Mbps. System refuses new connection request once it exceeds the bandwidth threshold. ● Adopt the following video transmission protocol: HTTP, TCP, UDP, MULTICAST, RTP/RTCP, RTSP and etc. ● Support web access.
Network Management	● Realize network camera configuration and management via Ethernet. ● Support device management via web or client-end.
Power	● External power adapter DC 12V. ● Support PoE. **Warning！** **Do not connect these two power supplying sources to the device at the same time; it may result in device damage!**
Assistant Function	● Log function ● Support system resource information and running status real-time display. ● Day/Night mode auto switch. ● Support picture parameter setup such as electronic shutter and gain setup. ● Support motion detect. ● Backlight compensation: screen auto split to realize backlight compensation to adjust the bright. ● Support video watermark function to avoid vicious video modification. ● Built-in IR light. Support IR night vision. ● The enclosure conforms to the IP 66 protection. Has the waterproof function.

1.3 Specifications

1.3.1 Performance

Please refer to the following sheet for network camera performance specification.

Parameter \ Model		ICIP B2000S Series
System	Main Processor	TI Davinci high performance DSP
	OS	Embedded LINUX
	System Resources	Support real-time network, local record, and remote operation at the same time.
	User Interface	Remote operation interface such as WEB, DSS, PSS
	System Status	Bit stream statistics, log, and software version.
Video Parameter	Image Sensor	1/3-inch CMOS
	Pixel	1920(H)*1080(V)
	Gain Control	Fixed/Auto
	White Balance	Manual/Auto
	Exposure Mode	Manual/Auto PAL: It ranges from 1/4 to 1/10000 NTSC: It ranges from 1/3 to 1/10000
	Video Compression Standard	H264/ H.264B/MJPEG
	Video Frame Rate	PAL: Main stream(1920*1080@25fps)， extra stream(352*288@25fps) NTSC: Main stream(1920*1080@30fps)， extra stream(352*240@30fps)
	Video Bit Rate	H.264: 56Kbps-8192Kbps. MJPEG is adjustable and bit rate is adjustable. Support customized setup.
	Video Flip	Support mirror. Support flip function.
	Snapshot	Max 1f/s snapshot. File extension name is JPEG.
	Privacy Mask	Supports max 4 privacy mask zones
	Video Setup	Support parameter setup such as bright, contrast.
	Video Information	Channel title, time title, motion detect, camera masking.
	Lens	3.6mm, 6mm, 8mm. Fixed focus.
	Lens Interface	M12. Lens is the default accessories
Video	Motion Detect	396 (18*22) detection zones；sensitivity level ranges from 1 to 6 (The 6th level has the highest sensitivity) Activation event: video storage, image snapshot, log, email function and etc.
Record and Backup	Storage Management	Support display local storage status
Network	Wire Network	1- channel wire Ethernet port, 10/100 Base-T Ethernet
	Network Protocol	Standard HTTP, TCP/IP, ARP, IGMP, ICMP, RTSP, RTP,UDP, RTCP, SMTP, FTP, DHCP, DNS, DDNS, PPPOE, UPNP, NTP, Bonjour,

		SNMP.
	Remote Operation	Monitor, system setup, file download, log information, maintenance , upgrade and etc
	Restore Default Setup	Reset button
	IR light	IR light 20-30M.
General Parameter	**Power**	DC12V power and PoE.
	Power Consumption	6W MAX
	Working Temperature	-10℃~+60℃
	Working Humidify	10%~90%
	Dimensions(mm)	70*66*160
	Weight	0.5Kg（Excluding box）
	Installation	Bracket installation

1.3.2 Factory Default Setup

Please refer to the following sheet for factory default setup information.

Setup		**Item**			**Default Setup**
					ICIP B2000S Series
Camera	Conditions	Brightness			50
		Contrast			50
		Saturation			50
		Sharpness			50
		Anti-flicker			Outdoor
		Exposure Mode			Auto
		Gain Adjust			0-50
		Scene Mode			Auto
		Day/night Mode			Auto
		BLC			Off
		Mirror			Off
		Flip			Off
	Video	Video bit stream	Main Stream	Bit stream type	General
				Encode mode	H.264
				Resolution	1080P (1920*1080)
				Frame Rate（FPS）	PAL:25 NTSC:30
				Bit Rate Type	CBR
				Recommended Bit	3584-8192 Kb/S
				Bit Rate	8192
				Watermark	Enable

Setup	Item			Default Setup ICIP B2000S Series
			Watermark character	DigitalCCTV
		Sub Stream	Enable	Enable
			Bit stream type	General
			Encode mode	H.264
			Resolution	PAL:CIF(352*288) NTSC:CIF(352*240)
			Frame Rate（FPS）	PAL:25 NTSC:30
			Bit Rate Type	CBR
			Recommended Bit	192-1024Kb/S
			Bit Rate	1024
	Snapshot		Snapshot Type	General
			Image Size	1080P (1920*1080)
			Quality	5
			Interval	1s
	Video Overlay		Privacy Mask	Disable
			Channel Title	Enable
			Time Title	Enable
	Path		Snapshot Path	C:\PictureDownload
			Record Path	C:\RecordDownload
Network	TCP/IP		Host Name	IPC
			Ethernet Card	Wire
			Mode	Static
			Mac Address	Device MAC address when it is shipped out of the factory
			IP Version	IPV4
			IP Address	192.168.1.108
			Subnet Mask	255.255.255.0
			Default Gateway	192.168.1.1
			Preferred DNS	8.8.8.8
			Alternate	8.8.8.8

Setup	Item		Default Setup
			ICIP B2000S Series
		DNS	
		Enable ARP/Ping set device IP address service	Enable
	Connection	Max Connection	10
		TCP Port	37777
		UDP Port	37778
		HTTP Port	80
		RTSP Port	554
		HTTPs enable	Disable
		HTTPs Port	443
	PPPoE	Enable	Disable
		Username	none
		Password	N/A
	DDNS	Server Type	Disable，CN99 DDNS
		Server IP	none
		Server Port	80
		Domain Name	none
		User	none
		Password	****
		Update Period	10 minutes
	IP Filter	Trusted sites	Disable
	SMTP(Email)	SMTP Server	none
		Port	25
		Anonymity	Disable
		User Name	anonymity
		Password	****
		Sender	none
		Authentication (Encryption mode)	N/A

Setup	Item			Default Setup ICIP B2000S Series
			Title (Subject)	IPC Message
			Attachment	N/A
			Mail Receiver	0 seconds
			Email Test	Disable，interval=60 seconds
	UPnP		Enable UPnP	Disable
	SNMP		SNMP Port	161
			Read Community	public
			Write Community	private
			Trap Address	N/A
			Trap Port	162
	Bonjour		Enable	Enable
			Server Name	SN. It depends on the actual device.
	Multicast		Multicast Address	239.255.42.42
			Port	36666
	QoS		Real-time Monitor	0
			Command	0
Event	Video detect	Motion Detect	Enable	Disable
			Anti-dither	5 seconds
			Sensitivity	3
			Record Channel	Enable
			Record Delay	10 seconds
			Send Email	Disable
			Snapshot	Disable
		Video Masking	Enable	Disable
			Record Channel	Enable
			Record Delay	10 seconds
			Send Email	Disable
			Snapshot	Disable
		Disconnectio	Enable	Disable

Setup	Item			Default Setup ICIP B2000S Series
		n	Record	Enable
			Record Delay	10 seconds
		IP Conflict	Enable	Disable
			Record	Enable
			Relay out Delay	10 seconds
Storage	Storage	FTP	Enable FTP	Disable
			Server IP	N/A
			Port	21
			Username	anonymity
			Password	N/A
			Remote path	share
	Record Control		Pack Duration	8 minutes
			Pre-record	5 seconds
			Disk Full	Overwrite
			Record Mode	Auto
			Record Stream	Main stream
System	General	Local Host	Device No	Device manufacture SN
			Language	English
			Video Standard	PAL
		Date and time	Date Format	Y-M-D
			Time Format	24H
			Time Zone	GMT+08:00
			System Time	Sync
			DST	Disable
			DST Type	Week
			Start Time	00:00:00 of the first Sunday of the month
			End Time	00:00:00 of the second Monday of the month
			NTP	Disable
			NTP Server	clock.isc.org
			Port	37
			Update Period	10 minutes
	Auto Maintenance		Auto Reboot	Enable Each 02:00 Tuesday

Setup	Item		Default Setup
			ICIP B2000S Series
		Auto Delete Old Files	Disable

2 Structure

2.1 Multiple-function Combination Cable

You can refer to the following figure for multiple-function combination cable information. See Figure 2-1.

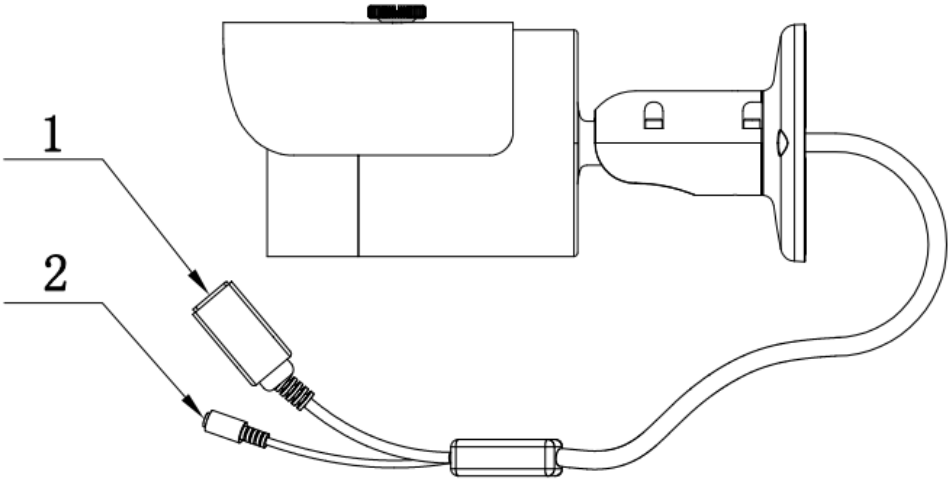

Figure 2-1

Please refer to the following sheet for detailed information.

SN	Port Name	Function	Connection	Note
1.	LAN	Network port	Ethernet port	Connect to standard Ethernet cable.
2	DC12V	Power input port	/	Power input port. Input DC 12V.

2.2 Framework and Dimension

Please refer to the following two figures for dimension information. The unit is mm. See Figure 2-2 and Figure 2-3.

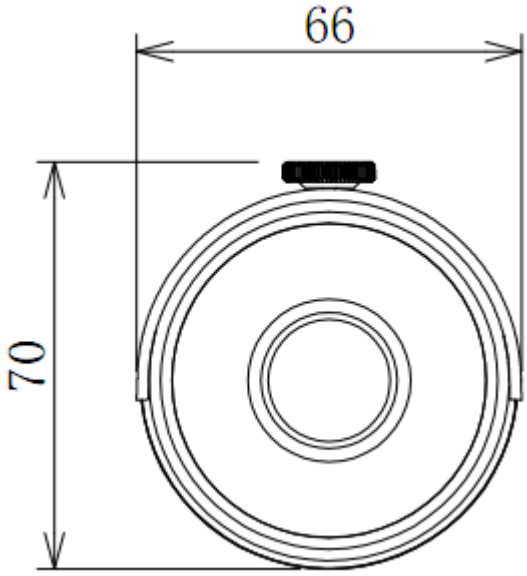

Figure 2-2

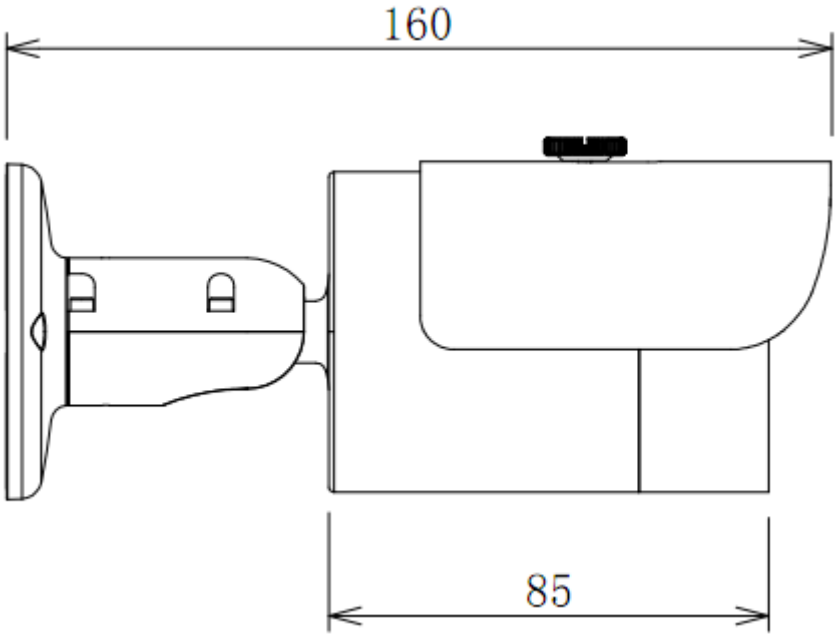

Figure 2-3

3 Device Installation

Important

The installation wall shall min sustain 3X weight of the bracket and camera.

Please follow the steps listed below to install the device. Please refer to Figure 3-1 and Figure 3-2 for reference.

Step 1

Paste the installation map on the surface of the wall or the ceiling.

Step 2

Dig the installation holes according to the installation map.

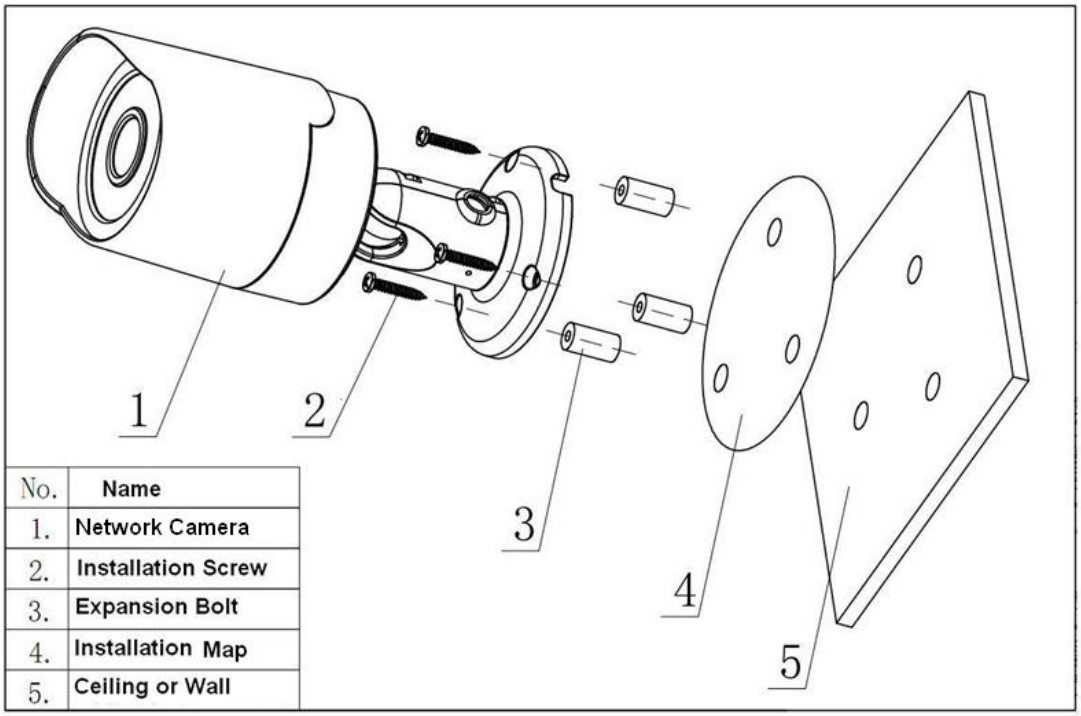

No.	Name
1.	Network Camera
2.	Installation Screw
3.	Expansion Bolt
4.	Installation Map
5.	Ceiling or Wall

Figure 3-1

Step 3

Open the accessories bag and then take the expansion bolt out. Insert the expansion bolt into the installation holes.

Step 4

Take the screws from the accessories bag and then use them to secure the device on the installation surface of the wall or the ceiling. The sun shield of the device can move forward or backward. Please secure the set screw of the sun shield after you fixed the device.

Step 5

Connect the corresponding cables.

Step 6

Use the cross-head screwdriver to loosen the adjust screw.

Step 7

Turn the device in different directions to make it suitable for the monitor position.

Step 8

Use the cross-head screwdriver to fix the adjust screw firmly.

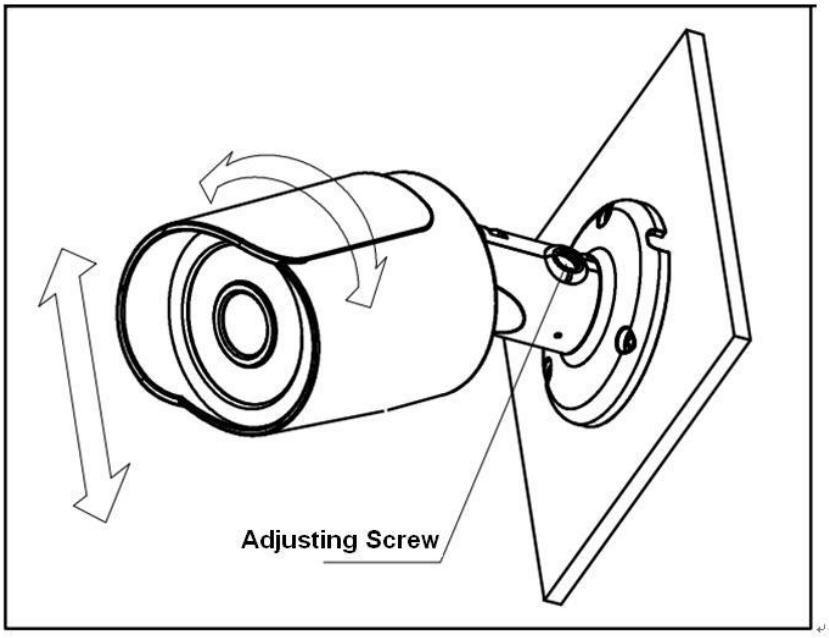

Figure 3-2

4 Quick Configuration Tool

4.1 Overview

Quick configuration tool can search current IP address, modify IP address. At the same time, you can use it to upgrade the device.
Please note the tool only applies to the IP addresses in the same segment.

4.2 Operation

Double click the “ConfigTools.exe” icon; you can see an interface is shown as in Figure 4-1.
In the device list interface, you can view device IP address, port number, subnet mask, default gateway, MAC address and etc.

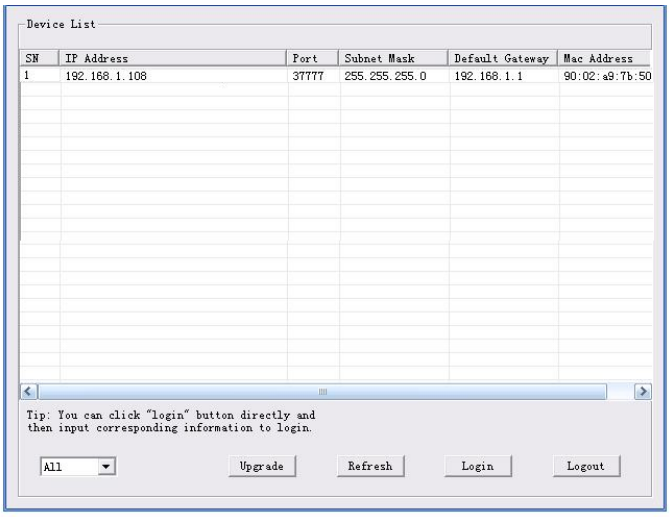

Figure 4-1

Select one IP address and then right click mouse, you can see an interface is shown as in Figure 4-2.
Note:
You can set the IP address, subnet mask and gateway for the network camera and PC. Please note network camera IP address and PC IP address shall be in the same network segment if there is no router. Network camera default IP address is 192.168.1.108. If there is a router, please set the corresponding gateway and subnet mask.
The factory default user name is **admin** and password is **admin**. For security reasons, please modify your password after you first login.
For detailed WEB operation, please refer to the network camera Web Operation Manual in the resource CD.

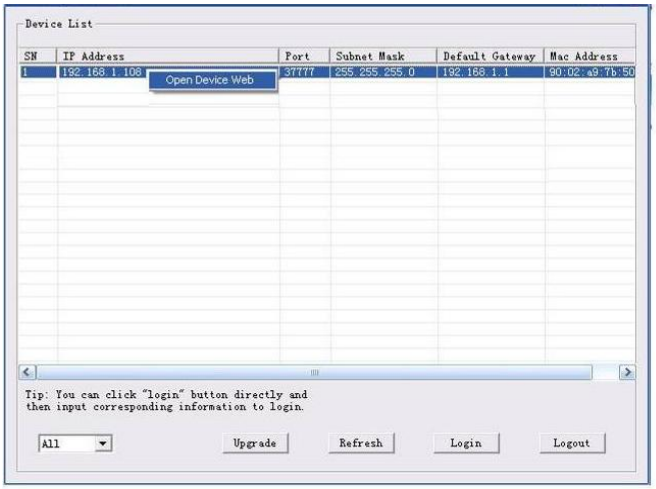

Figure 4-2

Select the “Open Device Web” item; you can go to the corresponding web login interface. See Figure 4-3.

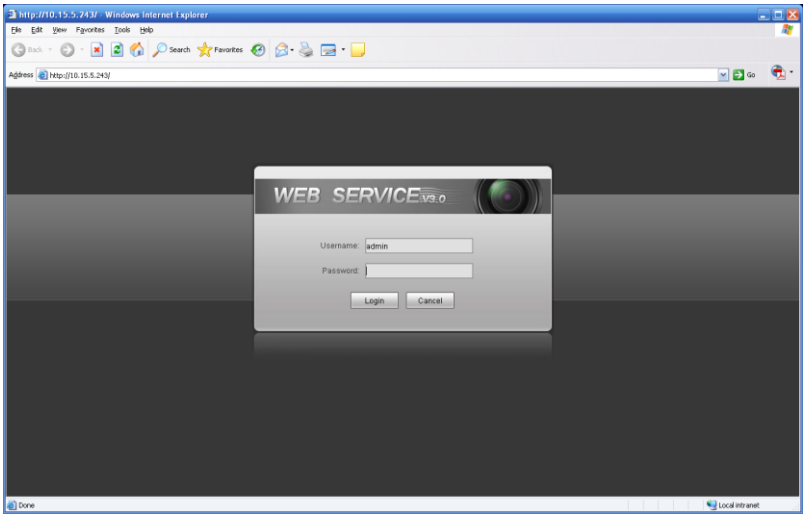

Figure 4-3

If you want to modify the device IP address without logging in the device web interface, you can go to the configuration tool main interface to set.

In the configuration tool search interface (Figure 4-1), please select a device IP address and then double click it to open the login interface. Or you can select an IP address and then click the Login button to go to the login interface. See Figure 4-4.

In Figure 4-4, you can view device IP address, user name, password and port. Please modify the corresponding information to login.

Please note the port information here shall be identical with the port value you set in TCP port in Web Network interface. Otherwise, you can not login the device.

If you are using device background upgrade port 3800 to login, other setups are all invalid.

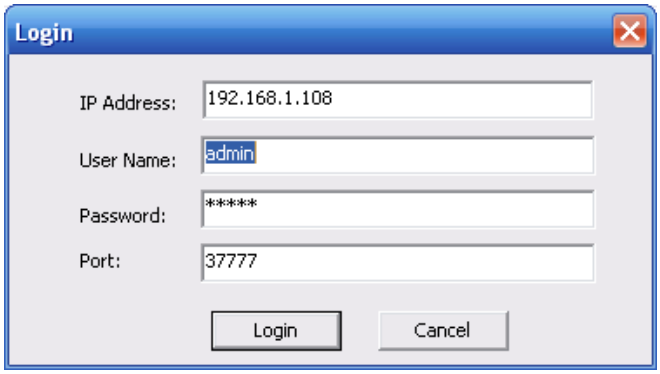

Figure 4-4

After you logged in, the configuration tool main interface is shown as below. See Figure 4-5.

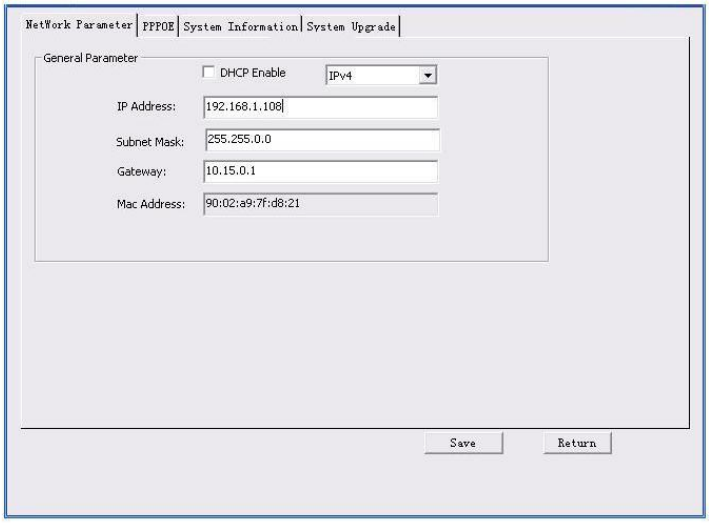

Figure 4-5

For detailed information and operation instruction of the quick configuration tool, please refer to the *Quick Configuration Tool User's Manual* included in the resources CD.

5 Web Operation

This series network camera product supports the Web access and management via PC.
Web includes several modules: monitor channel preview, system configuration, alarm and etc.

5.1 Network Connection

Please follow the steps listed below for network connection.

- Make sure the network camera has connected to the network properly.
- Please set the IP address, subnet mask and gateway of the PC and the network camera respectively. Network camera default IP address is 192.168.1.108. Subnet mask is 255.255.255.0. Gateway is 192.168.1.1
- Use order ping ***.***.***.***(* network camera address) to check connection is OK or not.

5.2 Login and Logout

Open IE and input network camera address in the address bar.
For example, if your camera IP is 192.168.1.108, then please input http:// 192.168.1.108 in IE address bar. See Figure 5-1.

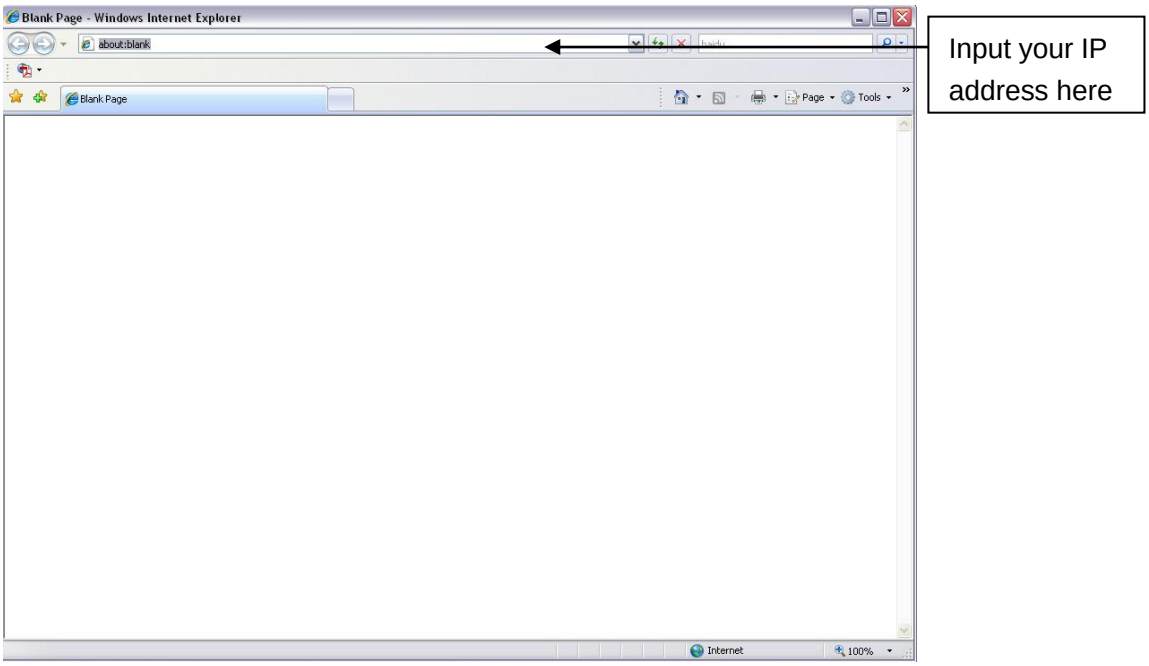

Figure 5-1

The login interface is shown as below. See Figure 5-2.
Please input your user name and password.
Default factory name is admin and password is admin.
Note: For security reasons, please modify your password after you first login.

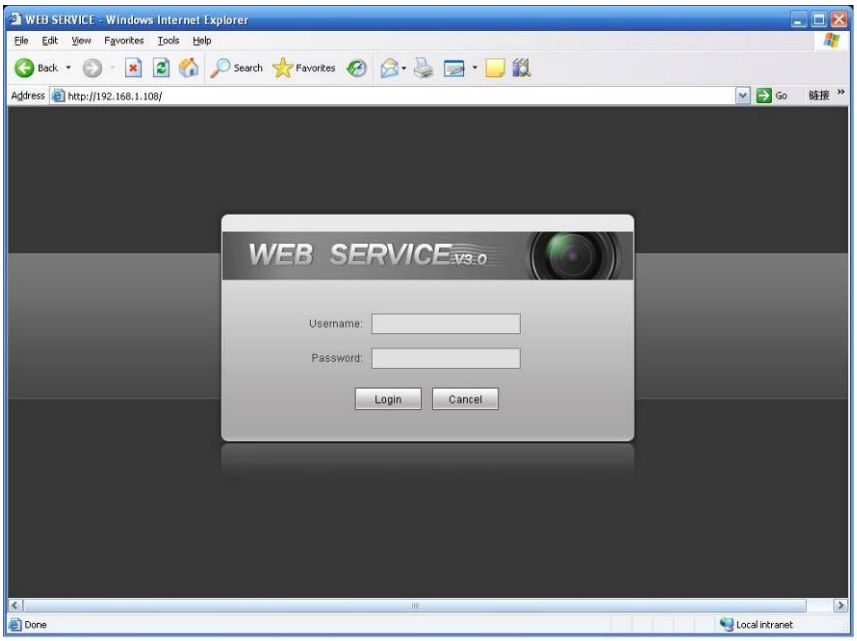

Figure 5-2

If it is your first time to login, system pops up warning information to ask you whether install control webrec.cab or not after you logged in for one minute. Please click OK button, system can automatically install the control. When system is upgrading, it can overwrite the previous Web too. If you can't download the ActiveX file, please check whether you have installed the plug-in to disable the control download. Or you can lower the IE security level. See Figure 5-3.

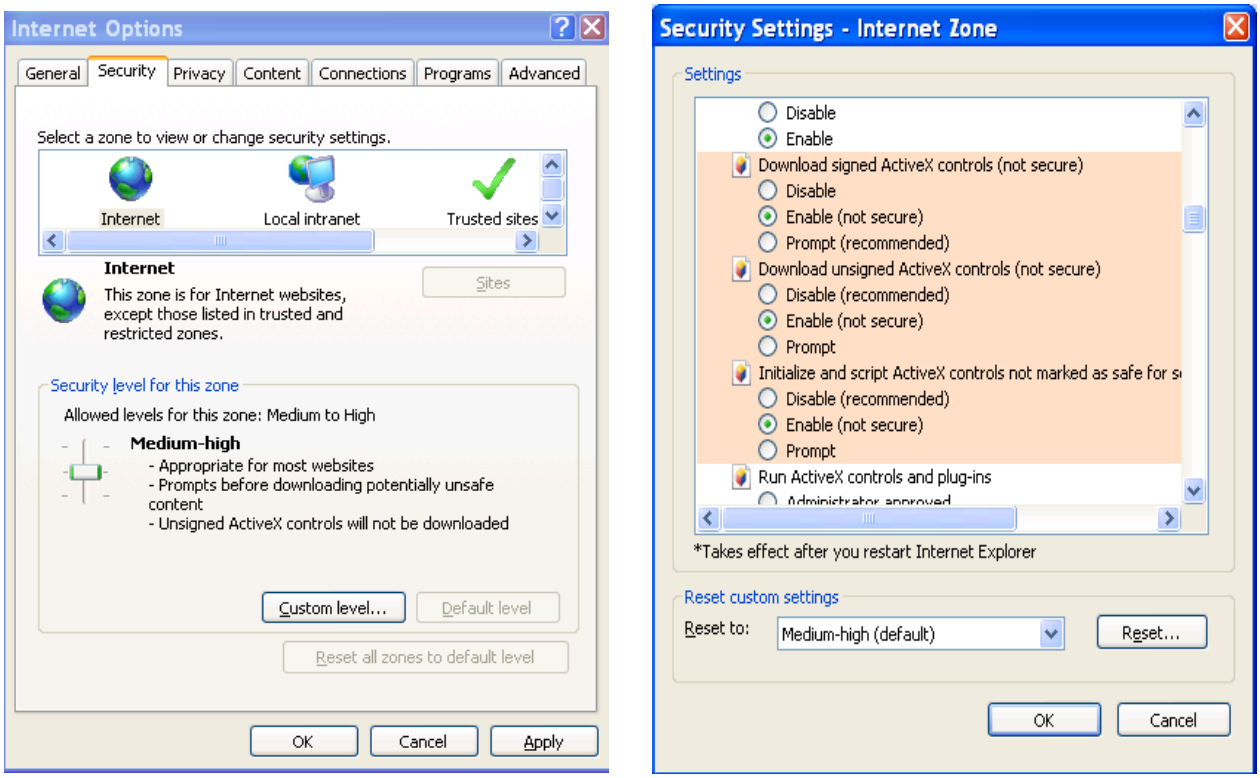

Figure 5-3

After you logged in, you can see the main window. See Figure 5-4.

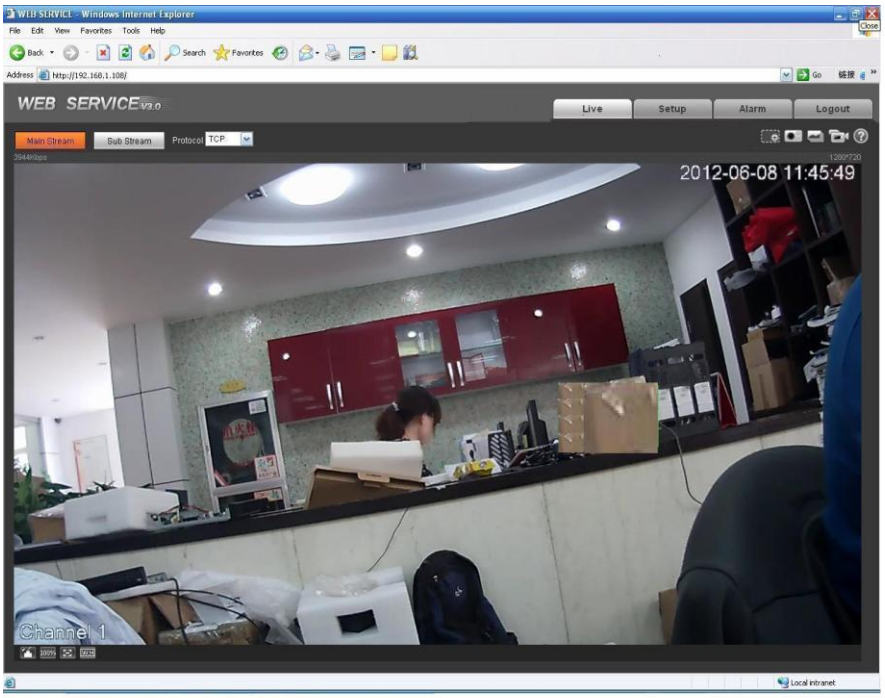

Figure 5-4

Please refer to the Web Operation Manual included in the resource CD for detailed operation instruction.

6 FAQ

Bug	
I can not boot up the device or operate properly.	Please click RESET button for at least five seconds to restore factory default setup.
The water leakage occurred.	The unauthorized front or rear cap remove many result in water leakage. The glass front cap has sustained heavy push or strike. The waterproof plug of the rear cap becomes loosen.
IR video is poor.	Do not use the proper supplying power. The IR light can not turn on completely. The object is out of the IR distance range of current device. IR-CUT does not turn to the night mode. The photosensitive chip of the front-end can not sense the IR light.
I can not upgrade the device via network.	When network upgrade operation failed, you can use port 3800 to continue upgrade.
I can not login the client-end or the WEB.	● For Windows OS 98 or Windows ME user, if you can not install the client-end or can not view after the installation. We recommend the win2000sp4 OS or install the client-end of the low version. ● The Active X control is blocked. ● The display card version shall be dx8.1 or higher. ● Network connection error occurred. ● Invalid network setup. ● Invalid user name or password.
I can not play the download file.	● There is no player. ● There is no DX8.1 or higher. ● For the MEDIA PLAYER, there shall be Div X503Bundle.exe plugin if you play the .AVI file. ● For Windows XP user, you need to install the plugin DivX503Bundle.exe and ffdsho-2004 1012.exe.
To guarantee setup update	After you modified the important setup, please reboot the device via the software to make sure the setup has been updated to the storage medium.
Power adapter	● The general power adapter can work ranging from 0℃ to 40 ℃. The device may result in unstable power supply when the temperature exceeds the working temperature. ● Please replace an industry-level power adapter if you are using in the harsh environments.

Appendix Toxic or Hazardous Materials or Elements

Component Name	Toxic or Hazardous Materials or Elements					
	Pb	**Hg**	**Cd**	**Cr VI**	**PBB**	**PBDE**
Circuit Board Component	○	○	○	○	○	○
Device Case	○	○	○	○	○	○
Wire and Cable	○	○	○	○	○	○
Packing Components	○	○	○	○	○	○
Accessories	○	○	○	○	○	○

O: Indicates that the concentration of the hazardous substance in all homogeneous materials in the parts is below the relevant threshold of the SJ/T11363-2006 standard.

X: Indicates that the concentration of the hazardous substance of at least one of all homogeneous materials in the parts is above the relevant threshold of the SJ/T11363-2006 standard. During the environmental-friendly use period (EFUP) period, the toxic or hazardous substance or elements contained in products will not leak or mutate so that the use of these (substances or elements) will not result in any severe environmental pollution, any bodily injury or damage to any assets. The consumer is not authorized to process such kind of substances or elements, please return to the corresponding local authorities to process according to your local government statutes.

Note

- **This user's manual is for reference only. Slight difference may be found in user interface.**
- **All the designs and software here are subject to change without prior written notice.**
- **All trademarks and registered trademarks mentioned are the properties of their respective owners.**
- **If there is any uncertainty or controversy, please refer to the final explanation of us.**
- **Please visit our website for more information.**