HD IR Waterproof Fixed Network Camera User's Manual

Version 1.2.1

Welcome

Thank you for purchasing our network camera!

This user's manual is designed to be a reference tool for your system.

Please read the following safeguard and warnings carefully before you use this series product!

Please keep this user's manual well for future reference!

Important Safeguards and Warnings

1．Electrical safety

All installation and operation here should conform to your local electrical safety codes.
The power shall conform to the requirement in the SELV (Safety Extra Low Voltage) and the Limited power source is rated 12V DC or 24V AC in the IEC60950-1. (Refer to general introduction) **Please note: Do not connect two power supplying sources to the device at the same time; it may result in device damage!**
We assume no liability or responsibility for all the fires or electrical shock caused by improper handling or installation.
We are not liable for any problems caused by unauthorized modification or attempted repair.

2．Transportation security

Heavy stress, violent vibration or water splash are not allowed during transportation, storage and installation.

3．Installation

Do not apply power to the camera before completing installation.
Please install the proper power cut-off device during the installation connection.
Always follow the instruction guide the manufacturer recommended.

4．Qualified engineers needed

All the examination and repair work should be done by the qualified service engineers.
We are not liable for any problems caused by unauthorized modifications or attempted repair.

5．Environment

This series network camera should be installed in a cool, dry place away from direct sunlight, inflammable, explosive substances and etc.
Please keep it away from the electromagnetic radiation object and environment.
Please make sure the CCD (CMOS) component is out of the radiation of the laser beam device. Otherwise it may result in CCD (CMOS) optical component damage.
Please keep the sound ventilation.
Do not allow the water and other liquid falling into the camera.
Thunder-proof device is recommended to be adopted to better prevent thunder.
The grounding studs of the product are recommended to be grounded to further enhance the reliability of the camera.

6. Daily Maintenance

Please shut down the device and then unplug the power cable before you begin daily maintenance work.

Do not touch the CCD (CMOS) optic component. You can use the blower to clean the dust on the lens surface.
Always use the dry soft cloth to clean the device. If there is too much dust, please use the water to dilute the mild detergent first and then use it to clean the device. Finally use the dry cloth to clean the device.
Please put the dustproof cap to protect the CCD (CMOS) component when you do not use the camera.
Dome enclosure is the optical component, do not touch the enclosure when you are installing the device or clean the enclosure when you are doing maintenance work. Please use professional optical clean method to clean the enclosure. Improper enclosure clean method (such as use cloth) may result in poor IR effect of camera with IR function.

7. Accessories

Be sure to use all the accessories recommended by manufacturer.
Before installation, please open the package and check all the components are included.
Contact your local retailer ASAP if something is broken in your package.

Accessory Name	Amount
Network Camera Unit	1
Quick Start Guide	1
Installation Accessories Bag	1
CD	1

Table of Contents

1 General Introduction 1

1.1 Overview 1

1.2 Features 1

1.3 Specifications 2

1.3.1 Performance 2

2 Structure 4

2.1 Combination Cable 4

2.2 Framework and Dimension 4

3 Device Installation 6

4 Quick Configuration Tool 8

4.1 Overview 8

4.2 Operation 8

5 Web Operation 10

5.1 Network Connection 10

5.2 Login and Main Interface 10

6 FAQ 13

Appendix Toxic or Hazardous Materials or Elements 14

1 General Introduction

1.1 Overview

This series network camera integrates the traditional camera and network video technology. It adopts video data collection, transmission together. It can connect to the network directly without any auxiliary device.

This series network camera uses standard H.264 video compression technology, which maximally guarantees the video quality.

It supports the IR night vision function. In the night environments, the device can use the IR light to highlight the object which is suitable for the surveillance function in the low illumination environments. The waterproof design conforms to the IP 66 level. It has the sound waterproof function suitable for use in the outdoor environments.

It can be used alone or used in a network area. When it is used lonely, you can connect it to the network and then use a network client-end. Due to its multiple functions and various uses, this series network camera is widely used in many environments such office, bank, road monitor and etc.

1.2 Features

User Management	● Different user rights for each group, one user belongs to one group. ● The user right shall not exceed the group right.
Storage Function	● Support central server backup function in accordance with your configuration and setup in alarm or schedule setting ● Support record via Web and the recorded file are storage in the client-end PC. ● Support network storage function such as FTP.
Data Transmission	● Data transmission via PoE.
Network Monitor	● It supports one-channel video data transmit to network terminal and then decode. Delaying time is within 270ms (network bandwidth support needed) ● Max supports 20 connections and output bandwidth is 32Mbps. System refuses new connection request once it exceeds the bandwidth threshold. ● Adopt the following video transmission protocol: HTTP, TCP, UDP, MULTICAST, RTP/RTCP, RTSP and etc. ● Support web access.
Network Management	● Realize network camera configuration and management via Ethernet. ● Support device management via web or client-end. ● Support various protocols.
Power	● External power adapter DC 12V. ● Support PoE. (Please refer to specifications.) **Warning！** **Do not connect these two power supplying sources to the device at the same time; it may result in device damage!**
Assistant Function	● Log function ● Support system resource information and running status real-time display. ● Day/Night mode auto switch. ● Support picture parameter setup such as electronic shutter and gain setup. ● Backlight compensation: screen auto split to realize backlight compensation to adjust the bright. ● Support digital WDR.

	● Support video watermark function to avoid vicious video modification. ● Support dual bit streams, ACF.

1.3 Specifications

1.3.1 Performance

Please refer to the following sheet for network camera performance specification.

Parameter \ Model		ICIP B1300A	ICIP B2000SA	ICIP B3000A
System	Main Processor	High performance DSP		
	OS	Embedded LINUX		
	System Resources	Support real-time network, local record, and remote operation at the same time.		
	User Interface	Remote operation interface such as WEB, DSS, PSS		
	System Status	Bit stream statistics, log, and software version.		
Video Parameter	Image Sensor	1/3 " CMOS	1/2.8" CMOS	1/3 " CMOS
	Pixel	1280(H) ×960(V)	1920(H) ×1080(V)	2048(H) ×1536(V)
	Day/Night Mode	Support day/night switch		
	Gain Control	Fixed/Auto		
	White Balance	Manual/Auto		
	BLC	On/Off		
	Exposure Mode	Auto/Low noise/Low motion blur/Manual It ranges from 1/3 to 1/100000.		
	Video Compression Standard	H264/H.264H/MJPEG		
	Video Frame Rate	PAL: Main stream(1280*960@25fps), extra stream (704*576@25fps) NTSC: Main stream(1280*960@30fps), extra stream(704*480@30fps)	PAL: Main stream(1920*1080@25fps), extra stream (704*576@25fps) NTSC: Main stream(1920*1080@30fps), extra stream(704*480@30fps)	PAL: Main stream(2048*1536@20fps), extra stream (704*576@20fps) Main stream(1920*1080@25fps), extra stream (704*576@25fps) NTSC: Main stream(2048*1536@20fps), extra stream(704*480@20fps)
	Video Bit Rate	H.264: 16Kbps-8192Kbps. MJPEG is adjustable and bit rate is adjustable. Support customized setup.		
	Video Flip	Support mirror. Support flip function.		
	Snapshot	Max 1f/s snapshot. File extension name is JPEG.		
	Privacy Mask	Supports max 4 privacy mask zones		

	Video Setup	Support parameter setup such as bright, contrast.	
	Video Information	Channel title, time title, motion detect, camera masking.	
	Lens	3.6mm, 6mm, 8mm. Fixed focus.	
	Lens Interface	M12. Lens is the default accessories	
Video	**Motion Detect**	396 (18*22) detection zones; sensitivity level ranges from 0 to 100; area threshold ranges from 0 to 100. Activation event, alarm device, audio/video storage, image snapshot, log, email function and etc.	
Record and Backup	**Record Priority**	Manual>video detect>schedule	
	Storage Management	Support display local storage status	
Network	**Wire Network**	1-channel wire Ethernet port, 10/100 Base-T Ethernet	
	Network Protocol	Standard HTTP, TCP/IP, ARP, IGMP, ICMP, RTSP, RTP,UDP, RTCP, SMTP, FTP, DHCP, DNS, DDNS, PPPOE, UPNP, NTP, Bonjour, SNMP.	
	Remote Operation	Monitor, system setup, file download, log information, maintenance , upgrade and etc	
	Restore Default Setup	Reset button	
	IR light	IR light 20-30M.	
General Parameter	**Power**	DC 12V power and PoE.	
	Power Consumption	DC 12V 5 W MAX	DC 12V 5.5 W MAX
	Working Temperature	-20℃~+60℃	
	Working Humidify	≤95%	
	Dimensions(mm)	70*66*160	
	Weight	500g（Excluding box）	
	Installation	Bracket installation	

2 Structure

2.1 Combination Cable

You can refer to the following figure for combination cable information. See Figure 2-1.

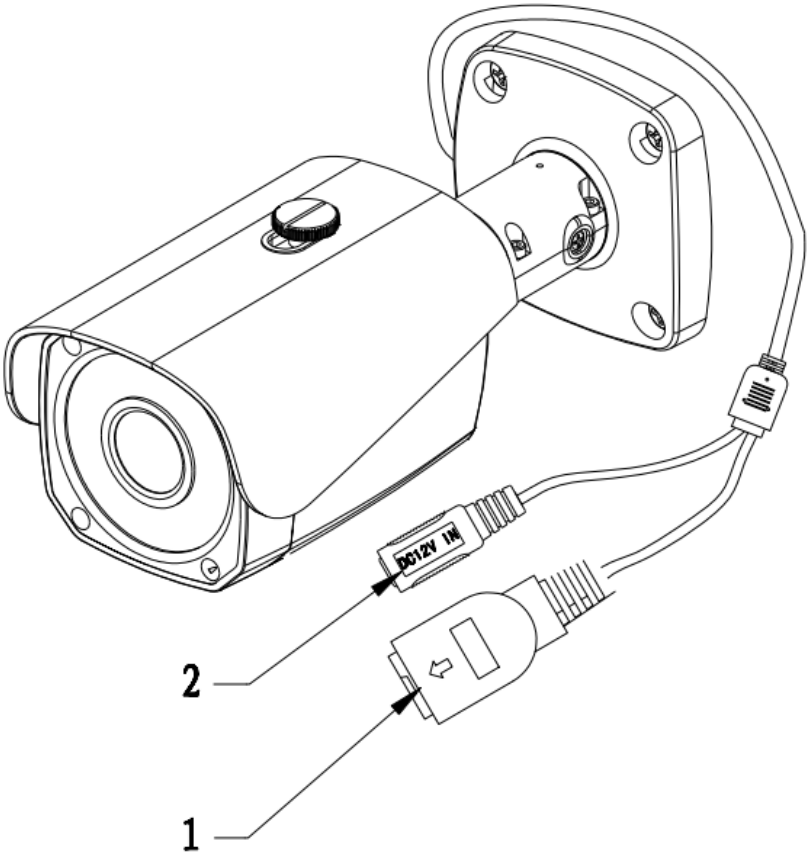

Figure 2-1 Combination cable

Please refer to the following sheet for detailed information.

SN	Port Name	Function	Connection	Note
1.	LAN	Network port	Ethernet port	Connect to standard Ethernet cable.
2	DC12V	Power input port	/	Power input port. Input DC 12V.

2.2 Framework and Dimension

Please refer to the following two figures for dimension information. The unit is mm. See Figure 2-2 and Figure 2-3.

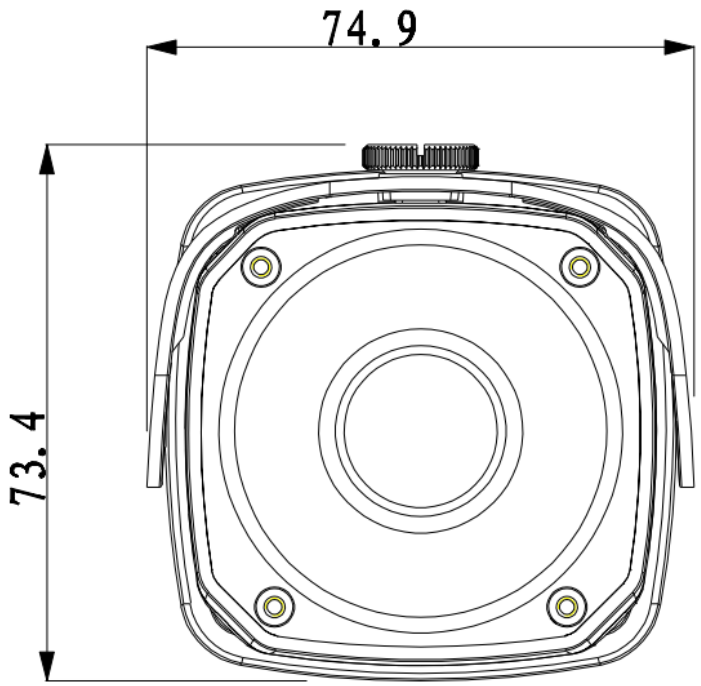

Figure 2-2 Dimension illustration 1

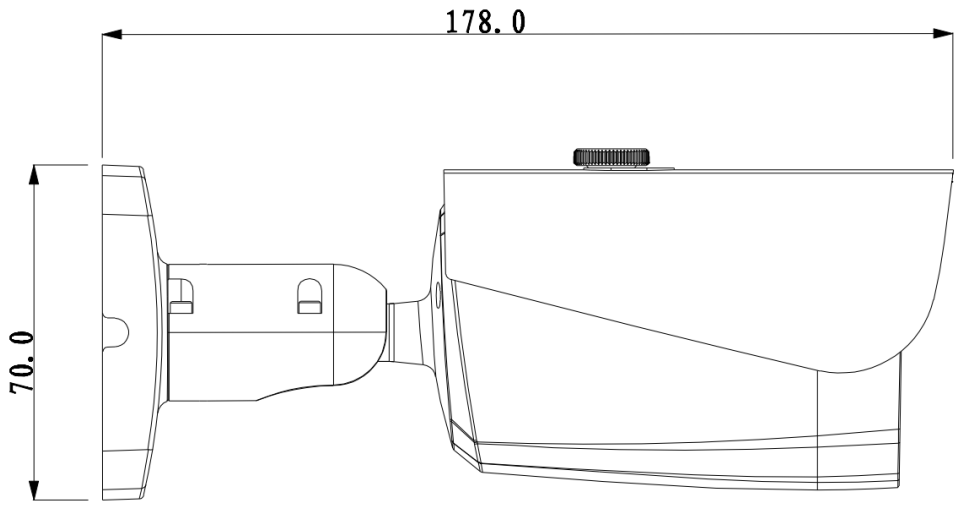

Figure 2-3 Dimension illustration 2

3 Device Installation

Important

The installation wall shall min sustain 3X weight of the bracket and camera.

Please follow the steps listed below to install the device. Please refer to Figure 3-1 and Figure 3-2 for reference.

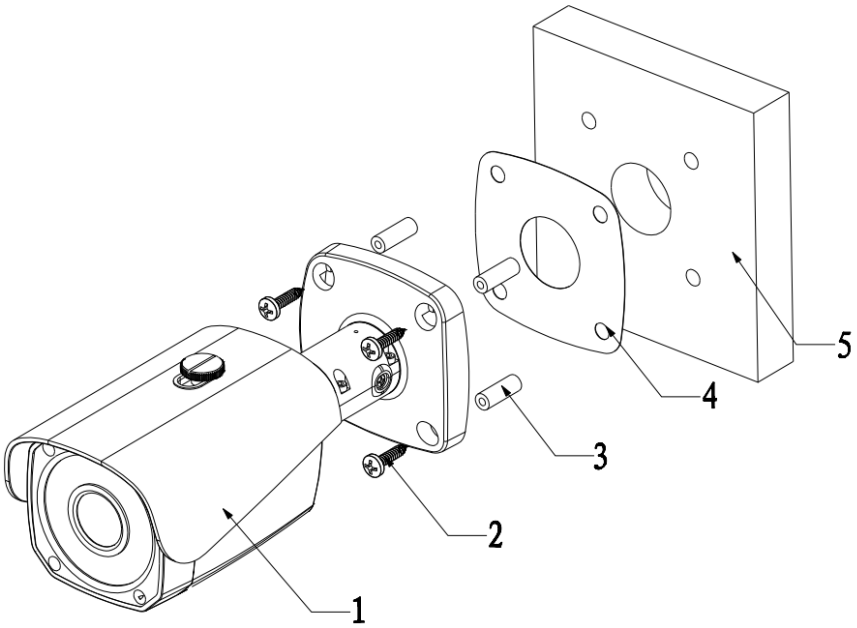

Figure 3-1 Device installation 1

No.	Name or Description
1	Camera unit
2	Self-tapping screw (accessory)
3	Expansion bolt (accessory)
4	Installation map (accessory)
5	Wall or ceiling

Step 1

Stick installation map to designated surface where you will install the device (wall or ceiling).

Step 2

Dig a hole according to position of hole on installation map.

Step 3

Open accessories bag, take out expansion bolt and insert it into the hole you just dug.

Step 4

Open accessories bag, take out self-tapping screw. Aim installation hole on device chassis at the expansion bolt. Use the self-tapping screw to fix the device on the installation surface (wall or ceiling).

Step 5

Plug external wiring of the device properly.

Note:

During device installation, connect grounding hole ⏚ to GND to improve device reliability. The GND is next to out hole at the rear of device. GND screw dimension is M2.5 x 5.

Step 6

Use cross-screwdriver to loosen adjusting screw.

Step 7

Adjust the device in all possible directions, and set its monitoring direction.

Step 8

Use cross-screwdriver driver to tighten the screws.

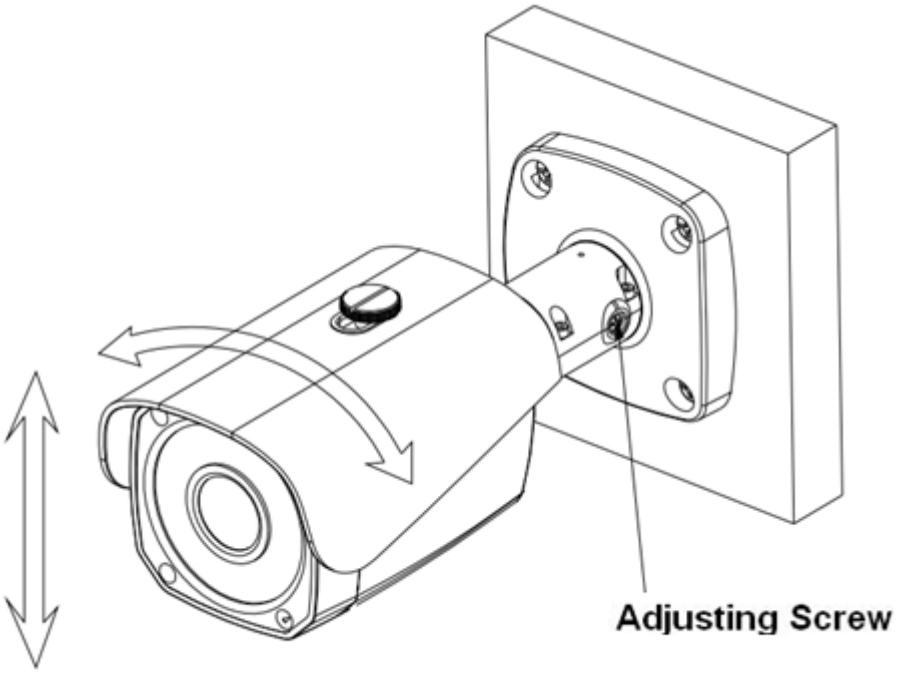

Figure 3-2 Device installation 2

4 Quick Configuration Tool

4.1 Overview

Quick configuration tool can search current IP address, modify IP address. At the same time, you can use it to upgrade the device.

Please note the tool only applies to the IP addresses in the same segment.

4.2 Operation

Double click the “ConfigTools.exe” icon, you can see an interface is shown as in Figure 4-1.

In the device list interface, you can view device IP address, port number, subnet mask, default gateway, MAC address and etc.

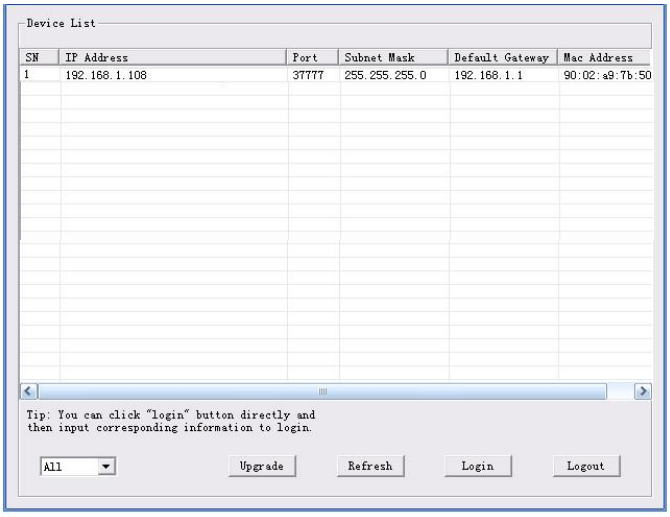

Figure 4-1 Search interface

Select one IP address and then right click mouse, you can see an interface is shown as in Figure 4-2. Select the “Open Device Web” item; you can go to the corresponding web login interface.

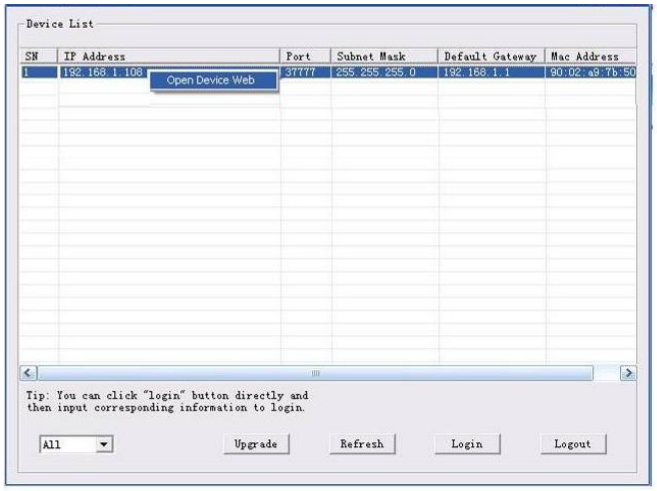

Figure 4-2 Search interface 2

If you want to modify the device IP address without logging in the device web interface, you can go to the configuration tool main interface to set.

In the configuration tool search interface (Figure 4-1), please select a device IP address and then double click it to open the login interface. Or you can select an IP address and then click the Login button to go to the login interface. See Figure 4-3.

In Figure 4-3, you can view device IP address, user name, password and port. Please modify the corresponding information to login.

Please note the port information here shall be identical with the port value you set in TCP port in Web Network interface. Otherwise, you cannot login the device.

If you are using device background upgrade port 3800 to login, other setups are all invalid.

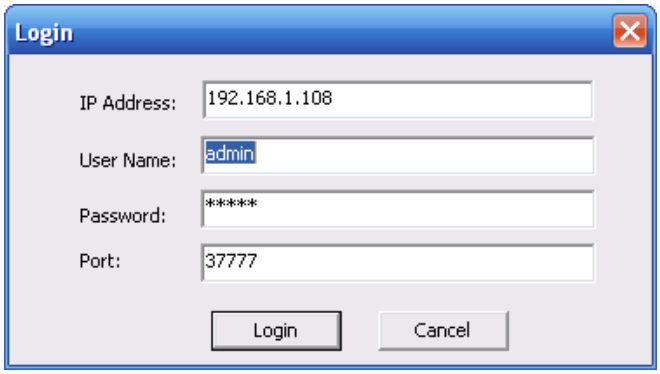

Figure 4-3 Login prompt

After you logged in, the configuration tool main interface is shown as below. See Figure 4-4.

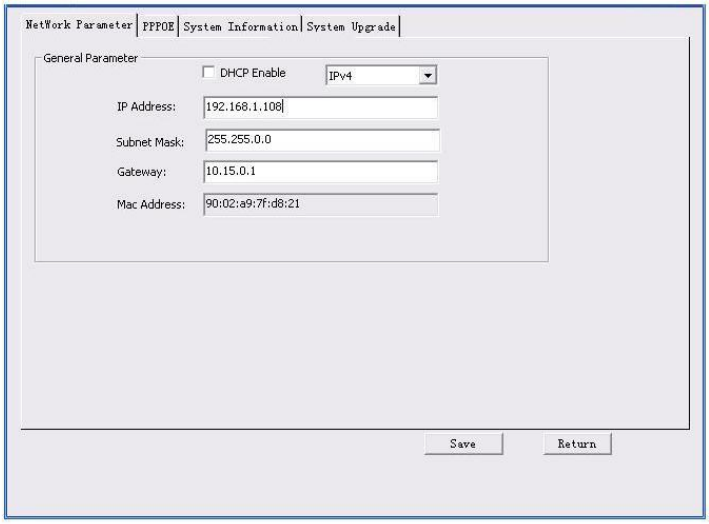

Figure 4-4 Main interface

For detailed information and operation instruction of the quick configuration tool, please refer to the *Quick Configuration Tool User's Manual* included in the resources CD.

5 Web Operation

This series network camera products support the Web access and management via PC.

Web includes several modules: Monitor channel preview, system configuration, alarm and etc.

5.1 Network Connection

Please follow the steps listed below for network connection.

- Make sure the network camera has connected to the network properly.
- Please set the IP address, subnet mask and gateway of the PC and the network camera respectively. Network camera default IP address is 192.168.1.108. Subnet mask is 255.255.255.0. Gateway is 192.168.1.1
- Use order ping ***.***.***.***(* network camera address) to check connection is OK or not.

5.2 Login and Main Interface

Open IE and input network camera address in the address bar. See Figure 5- 1.

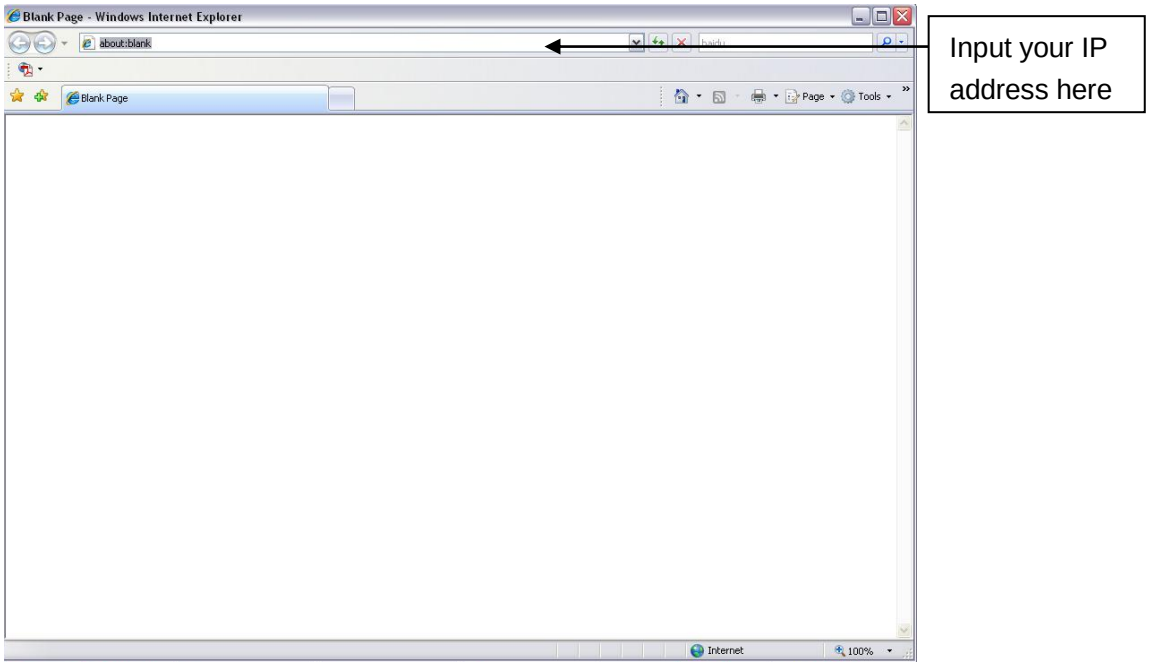

Figure 5- 1 IP address

The login interface is shown as below. See Figure 5- 2.

Please input your user name and password.

Default factory name is admin and password is admin.

Note: For security reasons, please modify your password after you first login.

Figure 5- 2 Web login

If it is your first time to log in, system pops up warning information to ask you whether install web plug-in or not after you logged in for one minute. For detailed plug-in installation, please refer to the Web Operation Manual included in the resource CD.

After you logged in, you can see the main window. See Figure 5- 3.

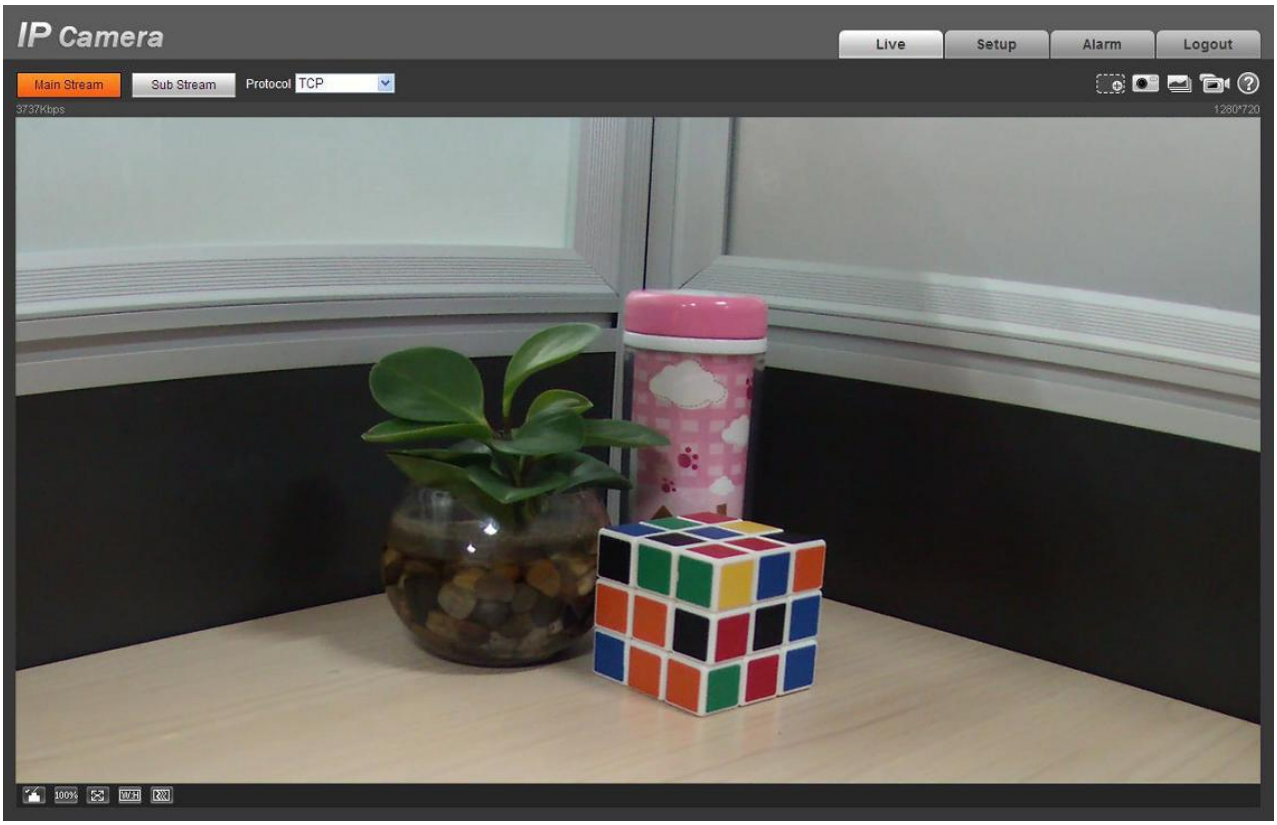

Figure 5- 3 Web monitoring window

Please refer to the Web Operation Manual included in the resource CD for detailed operation instruction.

6 FAQ

Bug	
I can not boot up the device or operate properly.	Please click RESET button for at least five seconds to restore factory default setup.
The water leakage occurred.	The unauthorized front or rear cap remove many result in water leakage. The glass front cap has sustained heavy push or strike. The waterproof plug of the rear cap becomes loosen.
IR video is poor.	Do not use the proper supplying power. The IR light can not turn on completely. The object is out of the IR distance range of current device. IR-CUT does not turn to the night mode. The photosensitive chip of the front-end can not sense the IR light.
I can not upgrade the device via network.	When network upgrade operation failed, you can use port 3800 to continue upgrade.
I can not login the client-end or the WEB.	● For Windows OS 98 or Windows ME user, if you can not install the client-end or can not view after the installation. We recommend the win2000sp4 OS or install the client-end of the low version. ● The Active X control is blocked. ● The display card version shall be dx8.1 or higher. ● Network connection error occurred. ● Invalid network setup. ● Invalid user name or password.
I can not play the download file.	● There is no player. ● There is no DX8.1 or higher. ● For the MEDIA PLAYER, there shall be Div X503Bundle.exe plugin if you play the .AVI file. ● For Windows XP user, you need to install the plugin DivX503Bundle.exe and ffdsho-2004 1012.exe.
To guarantee setup update	After you modified the important setup, please reboot the device via the software to make sure the setup has been updated to the storage medium.
Power adapter	● The general power adapter can work ranging from 0℃ to 40 ℃. The device may result in unstable power supply when the temperature exceeds the working temperature. ● Please replace an industry-level power adapter if you are using in the harsh environments.

Appendix Toxic or Hazardous Materials or Elements

Component Name	Toxic or Hazardous Materials or Elements					
	Pb	Hg	Cd	Cr VI	PBB	PBDE
Circuit Board Component	○	○	○	○	○	○
Device Case	○	○	○	○	○	○
Wire and Cable	○	○	○	○	○	○
Packing Components	○	○	○	○	○	○
Accessories	○	○	○	○	○	○

O: Indicates that the concentration of the hazardous substance in all homogeneous materials in the parts is below the relevant threshold of the SJ/T11363-2006 standard.

X: Indicates that the concentration of the hazardous substance of at least one of all homogeneous materials in the parts is above the relevant threshold of the SJ/T11363-2006 standard. During the environmental-friendly use period (EFUP) period, the toxic or hazardous substance or elements contained in products will not leak or mutate so that the use of these (substances or elements) will not result in any severe environmental pollution, any bodily injury or damage to any assets. The consumer is not authorized to process such kind of substances or elements, please return to the corresponding local authorities to process according to your local government statutes.

Note

- **This user's manual is for reference only. Slight difference may be found in user interface.**
- **All the designs and software here are subject to change without prior written notice.**
- **All trademarks and registered trademarks mentioned are the properties of their respective owners.**
- **If there is any uncertainty or controversy, please refer to the final explanation of us.**
- **Please visit our website for more information.**