HD IR Waterproof Fixed Network Camera

(With Integrated Bracket)

User's Manual

Version 1.0.1

Welcome

Thank you for purchasing our network camera!

This user's manual is designed to be a reference tool for your system.

Please read the following safeguard and warnings carefully before you use this series product!

Please keep this user's manual well for future reference!

Important Safeguards and Warnings

1．Electrical safety

All installation and operation here should conform to your local electrical safety codes.
The power shall conform to the requirement in the SELV (Safety Extra Low Voltage) and the Limited power source is rated 12V DC or 24V AC in the IEC60950-1. (Refer to general introduction) **Please note: Do not connect two power supplying sources to the device at the same time; it may result in device damage! The product must be grounded to reduce the risk of electronic shock.**
We assume no liability or responsibility for all the fires or electrical shock caused by improper handling or installation.
We are not liable for any problems caused by unauthorized modification or attempted repair.

2．Transportation security

Heavy stress, violent vibration or water splash are not allowed during transportation, storage and installation.

3．Installation

Do not apply power to the camera before completing installation.
Please install the proper power cut-off device during the installation connection.
Always follow the instruction guide the manufacturer recommended.

4．Qualified engineers needed

All the examination and repair work should be done by the qualified service engineers.
We are not liable for any problems caused by unauthorized modifications or attempted repair.

5．Environment

This series network camera should be installed in a cool, dry place away from direct sunlight, inflammable, explosive substances and etc.
Please keep it away from the electromagnetic radiation object and environment.
Please make sure the CCD (CMOS) component is out of the radiation of the laser beam device. Otherwise it may result in CCD (CMOS) optical component damage.
Please keep the sound ventilation.
Do not allow the water and other liquid falling into the camera.
Thunder-proof device is recommended to be adopted to better prevent thunder.
The grounding studs of the product are recommended to be grounded to further enhance the reliability of the camera.

6. Daily Maintenance

Please shut down the device and then unplug the power cable before you begin daily maintenance work.

Do not touch the CCD (CMOS) optic component. You can use the blower to clean the dust on the lens surface.
Always use the dry soft cloth to clean the device. If there is too much dust, please use the water to dilute the mild detergent first and then use it to clean the device. Finally use the dry cloth to clean the device.
Please put the dustproof cap to protect the CCD (CMOS) component when you do not use the camera.
Dome enclosure is the optical component, do not touch the enclosure when you are installing the device or clean the enclosure when you are doing maintenance work. Please use professional optical clean method to clean the enclosure. Improper enclosure clean method (such as use cloth) may result in poor IR effect of camera with IR function.

7. Accessories

Be sure to use all the accessories recommended by manufacturer.
Before installation, please open the package and check all the components are included.
Contact your local retailer ASAP if something is broken in your package.

Accessory Name	Amount
Network Camera Unit	1
Quick Start Guide	1
Installation Accessories Bag	1
12V to 24V Conversion Cable (For AC 24V series product only)	1
CD	1

Table of Contents

1 General Introduction 1

1.1 Overview 1

1.2 Features 1

1.3 Specifications 2

1.3.1 Performance 2

2 Structure 5

2.1 Multiple-function Combination Cable 5

2.2 Framework and Dimension 6

2.3 Bidirectional talk 7

2.3.1 Device-end to PC-end 7

2.3.2 PC-end to the Device-end 7

2.4 Alarm Setup 8

3 Installation 10

3.1 Device Installation 10

3.2 Micro SD Card Installation 10

3.3 Lens Adjustment 11

3.4 Bracket Adjustment 12

3.5 OSD Buttons 14

4 Quick Configuration Tool 16

4.1 Overview 16

4.2 Operation 16

5 Web Operation 18

5.1 Network Connection 18

5.2 Login and Main Interface 18

6 FAQ 20

7 Appendix Toxic or Hazardous Materials or Elements 21

1 General Introduction

1.1 Overview

This series network camera integrates the traditional camera and network video technology. It adopts audio and video data collection, transmission together. It can connect to the network directly without any auxiliary device.

This series network camera product uses standard H.264 video compression technology and G.711a audio compression technology, which maximally guarantee the audio and video quality.

It supports the IR night vision function. In the night environments, the device can use the IR light to highlight the object which is suitable for the surveillance function in the low illumination environments. The built-in protection enclosure and waterproof design conforms to the IP 66 level. It has the sound waterproof function suitable for use in the outdoor environments.

It supports real-time monitor and listening at the same time. It supports analog video output and dual-way bidirectional talk.

It can be used alone or used in a network area. When it is used lonely, you can connect it to the network and then use a network client-end. Due to its multiple functions and various uses, this series network camera is widely used in many environments such office, bank, road monitor and etc.

1.2 Features

User Management	● Different user rights for each group, one user belongs to one group. ● The user right shall not exceed the group right.
Storage Function	● Support central server backup function in accordance with your configuration and setup in alarm or schedule setting ● Support record via Web and the recorded file are storage in the client-end PC. ● Support built-in Micro SD card. ● Do not support local Micro SD card hot swap storage function. Support short-time storage when encounter disconnection. ● Support network storage function such as FTP.
Alarm Function	● Real-time respond to external on-off alarm input, and video detect as user pre-defined activation setup and generate corresponding message in screen and audio prompt(allow user to pre-record audio file) ● Real-time video detect: motion detect, camera masking.
Network Monitor	● Network camera supports one-channel audio/video data transmit to network terminal and then decode. Delay is within 270ms (network bandwidth support needed) ● Max supports 20 connections. ● Adopt the following audio and video transmission protocol: HTTP, TCP, UDP, MULTICAST, RTP/RTCP, RTSP and etc. ● Support web access.
Network Management	● Realize network camera configuration and management via Ethernet. ● Support device management via web or client-end.
Power	● External power adapter DC12V/AC 24V. You can select according to your actual environments. Please note system can not support these two types of power supplying at the same time.
Assistant Function	● Log function ● Support system resource information and running status real-time display.

	● Day/Night mode auto switch. ● Built-in IR light. Support IR night vision. ● Support picture parameter setup such as electronic shutter and gain setup. ● Backlight compensation: screen auto split to realize backlight compensation to adjust the bright. ● Support video watermark function to avoid vicious video modification. ● The enclosure conforms to the IP 66 protection. Has the waterproof function.

1.3 Specifications

1.3.1 Performance

Please refer to the following sheet for network camera performance specification.

Parameter \ Model		ICIP B3000AF
System	Main Processor	TI Davinci high performance DSP
	OS	Embedded LINUX
	System Resources	Support real-time network, local record, and remote operation at the same time.
	User Interface	Remote operation interface such as WEB, DSS, PSS
	System Status	Micro SD card status, bit stream statistics, log, and software version.
Video Parameter	Image Sensor	1/2.8-inch CMOS
	Pixel	2080(H)*1553(V)
	Day/Night Mode	Support day/night mode switch and IR-CUT at the same time. (The lens has built-in IR-CUT mechanical component.).
	Auto Aperture	Enable
	Gain Control	Fixed/Auto
	White Balance	Manual/Auto
	BLC	Off/BLC/WDR (1-100 adjustable)/HLC(anti-flicker is outdoor and is valid only when exposure mode is auto with range 1-100)
	Exposure Mode	Manual/Auto It ranges from 1/3 to 1/10000
	Video Compression Standard	H.264/ H.264H/H.264B/MJPEG Note: Some versions do not support H.264H.
	Video Frame Rate	PAL: Main stream (2048*1536@18fps) Extra stream (704*576@18fps) Main stream (1920*1080@25fps) Extra stream (704*576@25fps)
		NTSC： Main stream (2048*1536@20fps) Extra stream (704*480@20fps) Main stream (1920*1080@30fps) Extra stream (704*480@30fps)
	Video Bit Rate	H.264: 56Kbps-8192Kbps. H.264H 16Kbps-8192Kbps

		H.264B 56Kbps-8192Kbps MJPEG is adjustable and bit rate is adjustable. Support customized setup.
	Video Flip	Support mirror. Support flip function.
	Snapshot	Max 1f/s snapshot. File extension name is JPEG.
	Privacy Mask	Supports max 4 privacy mask zones
	Image adjustment	Support parameter adjustment such as bright, contrast.
	Video Information	Channel title, time title, motion detect, tampering.
	Lens	Manual zoom 3.3-12 mm@F1.4
	Lens Interface	Φ14 interface. Lens is the default accessories
Audio	**Audio Input**	1-channel. RCA
	Audio Output	1-channel. RCA
	Bidirectional Talk Input	Reuse the first audio input channel
	Audio Bit Rate	16kbps 16BIT
	Audio Compression Standard	G.711A/G.711Mu
Video	**Motion Detect**	396 (18*22) detection zones; sensitivity level ranges from 0 to 100; area threshold ranges from 0 to 100. Activation event: video storage, image snapshot, log, email function and etc.
Alarm Input		2-channel input，1-channel output Note: Only some series support this function.
Record and Backup	**Record Priority**	Manual>External alarm >Video detect>Schedule
	Storage Management	Support SD card storage, NAS storage
Network	**Wire Network**	1-channel wire Ethernet port, 10/100 Base-T Ethernet
	Network Protocol	HTTP,TCP,ARP,RTSP,RTP,UDP,RTCP,SMTP,FTP,DHCP,DNS,DDNS,PPPoE,IPv4/v6,SNMP,QoS,UPnP,NTP, HTTPS, 802.1x, Bonjour
	Protocol	PSIA(optional), ONVIF
	Remote Operation	Monitor, system setup, file download, log information, maintenance , upgrade and etc.
AUX Interface	**Video Output**	1 channel analog video output，BNC port. Note: Only some series support this function.
	Restore Default Setup	Reset button Note: Only some series support this function.
	Power	Support AC24V/DC12V power. (Can not support these two modes at the same time.)
General Parameter	**Power Consumption**	8W MAX (10W MAX when ICR switch)
	Working Temperature	-20℃~+60℃
	Working Humidify	≤95%
	Dimensions(mm)	φ104*306.7
	Weight	1250g(Excluding box)

	Installation	Bracket is included in the accessories bag.
	IR Distance	20~30m
	Protection Level	IP66

2 Structure

2.1 Multiple-function Combination Cable

You can refer to the following figure for multiple-function combination cable information. See Figure 2-1.

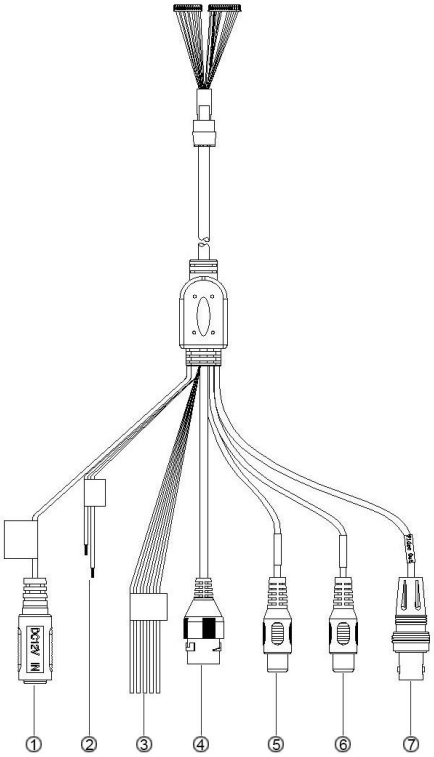

Figure 2-1 Multiple-function combination cable 1

Please refer to the following sheet for detailed information.

SN	Port Name	Function	Connection	Note
1	DC 12V/AC 24V	Power input port	/	Power port. Input DC 12V/AC 24V (Please use the provided conversion cable) Note: Please use according to your actual condition.
2	Reset	Reset connection (optional)	/	Hardware reset function. Connect two cables for 3 to 5 seconds; system hardware can restore default setup.
3	I/O	I/O connection (optional)	/	Connect to I/O port.
4	LAN	Network port	Ethernet port	Connect to standard Ethernet cable. Note: Before making crystal head, pull the anti-dust cover through network cable.

SN	Port Name	Function	Connection	Note
5	AUDIO IN	Audio input port	RCA	Input audio signal. It can receive the analog audio signal from the pickup.
6	AUDIO OUT	Audio output port	RCA	Output audio signal to the devices such as the sound box.
7	VIDEO OUT	Video output port (optional)	BNC	Output analog video signal. It can connect to the TV monitor to view the video.

Please refer to the follow sheet for detailed I/O port information.

Port Name	Color	Name	Note
I/O Port	Black	ALARM_COM	Alarm output public port.
	Brown	ALARM_NO	Alarm output port. It is to output the alarm signal to the alarm device. NO: normal open alarm output port. It works with the ALARM_COM port.
	Red	ALARM_IN1	Alarm input port 1. It is to receive the on-off signal from the external alarm source.
	Orange	ALARM_IN2	Alarm input port 2. It is to receive the on-off signal from the external alarm source.
	Yellow	GND	Ground port

2.2 Framework and Dimension

Please note all frame and dimension illustrations provided in this chapter are for reference only, and actual product may vary.Please select model a or b according to actual product.

Please refer to Figure 2-2 or Figure 2-3 for dimension information according to the actual product. The unit is mm. Please also see Figure 2-4.

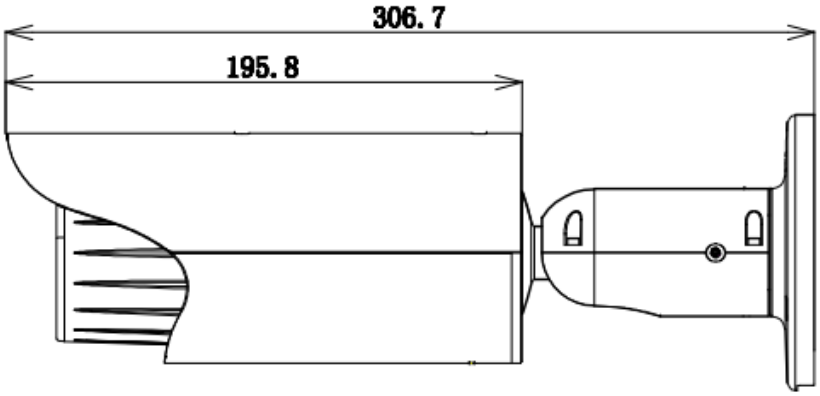

Figure 2-2 Model a

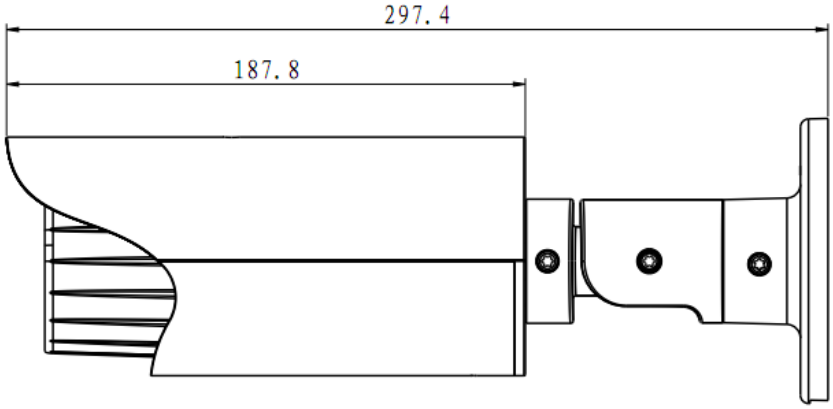

Figure 2-3 Model b

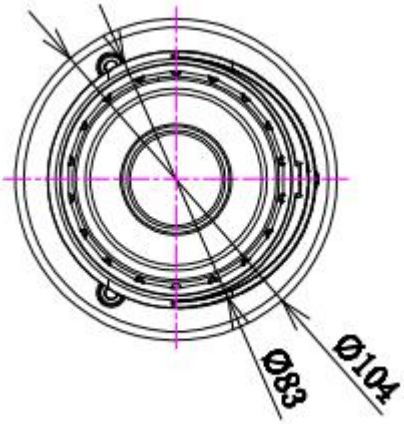

Figure 2-4 Dimension illustration 3

2.3 Bidirectional talk

2.3.1 Device-end to PC-end

Device Connection

Please connect the speaker or the MIC to the audio input port of the device. Then connect the earphone to the audio output port of the PC.

Login the Web and then click the Audio button to enable the bidirectional talk function.

You can see the button becomes orange after you enabled the audio talk function.

Click Audio button again to stop the bidirectional talk function.

Listening Operation

At the device end, speak via the speaker or the pickup, and then you can get the audio from the earphone or sound box at the pc-end.

2.3.2 PC-end to the Device-end

Device Connection

Connect the speaker or the MIC to the audio input port of the PC and then connect the earphone to the audio output port of the device.
Login the Web and then click the Audio button to enable the bidirectional talk function.
You can see the button becomes orange after you enabled the audio talk function.
Click Audio button again to stop the bidirectional talk function.
Please note the listening operation is null during the bidirectional talk process.

Listening Operation

At the PC-end, speak via the speaker or the pickup, and then you can get the audio from the earphone or sound box at the device-end.

2.4 Alarm Setup

The alarm interface is shown as in Figure 2-5. Please follow the steps listed below for local alarm input and output connection.
1) Connect the alarm input device to the alarm input port (red or orange) of the I/O cable.
2) Connect the alarm output device to the alarm output port (brown) and alarm output public port (black). The alarm output port supports NO (normal open) alarm device only.
3) Open the Web, go to the Figure 2-5. Please set the alarm input 01 port for the first channel of the I/O cable (red). The alarm input 02 is for the 2nd channel of I/O cable (orange). Then you can select the corresponding type (NO/NC.)
4) Set the WEB alarm output. The alarm output 01 is for the alarm output port of the device. It is the No.2 pin of the I/O cable.

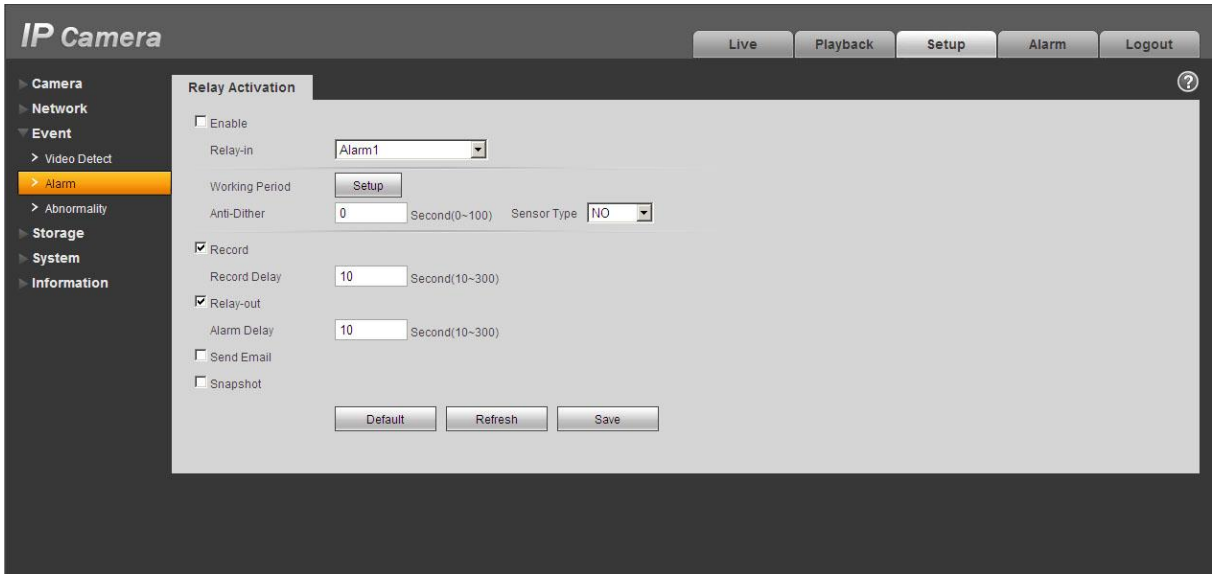

Figure 2-5 Alarm

Please refer to the following figure for alarm input information. See Figure 2-6.
Alarm input: When the input signal is idle or grounded, the device can collect the different statuses of the alarm input port. When the input signal is connected to the 5V or is idle, the device collects the logic “1”. When the input signal is grounded, the device collects the logic “0”.

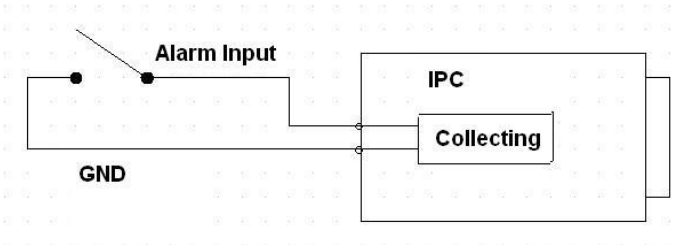

Figure 2-6 Alarm input

Please refer to the following figure for alarm output information. See Figure 2-7.
Port ALARM_COM and Port ALARM_NO composes an on-off button to provide the alarm output.
If the type is NO, this button is normal open. The button becomes on when there is an alarm output.
If the type is NC, this button is normal off. The button becomes off when there is an alarm output.

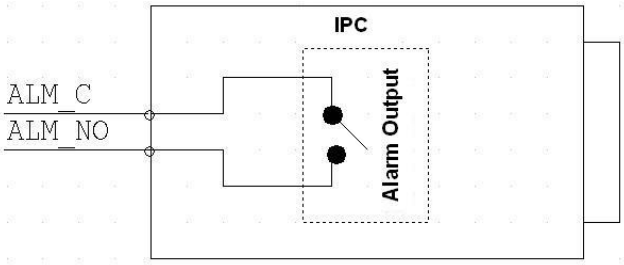

Figure 2-7 Alarm output

3 Installation

Please note all frame and dimension illustrations provided in this chapter are for reference only, and actual product may vary.

3.1 Device Installation

Please refer to Figure 3-1 for installation information according to the actual product. Please follow the steps listed below to install the device.

Step 1. Please draw the installation holes in the installation surface and then mark three expansion bolts holes in the surface. Insert three bolts in the hole and secure firmly.

Step 2. Please line up the installation holes of the bottom of the pendant mount bracket to the installation holes in the surface. Then insert the three bolts to the holes of the bottom of the bracket. Finally fasten the device on the installation surface.

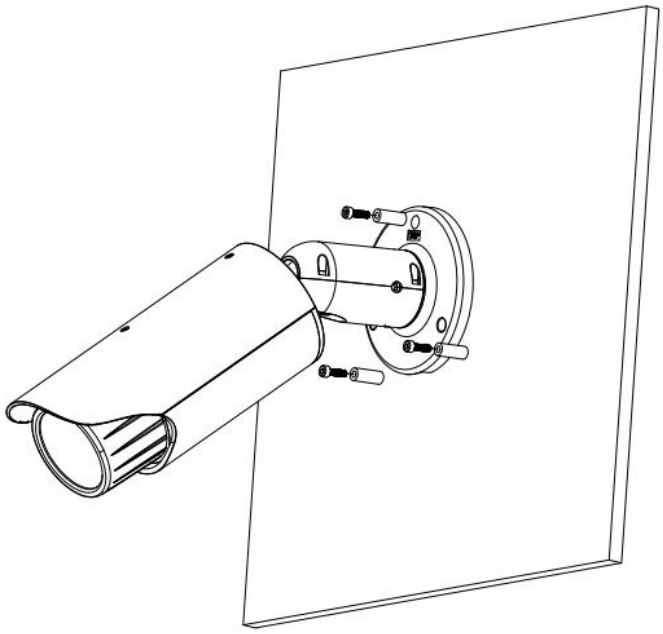

Figure 3-1 Device installation

3.2 Micro SD Card Installation

Use the inner hex wrench from the installation accessories bag to remove the four inner hex screws from the rear cover. Please refer to Figure 3-2 to find the Micro SD card slot position according to the actual product. Insert the Micro SD card and the fix the four screws of the rear cover.

Important

- Please make sure the cable connection between the power board and the main board is firm. Otherwise, it may result in device malfunction.
- The rear cover of the device adopts the waterproof design. Please secure four screws firmly after you complete the Micro SD card installation.

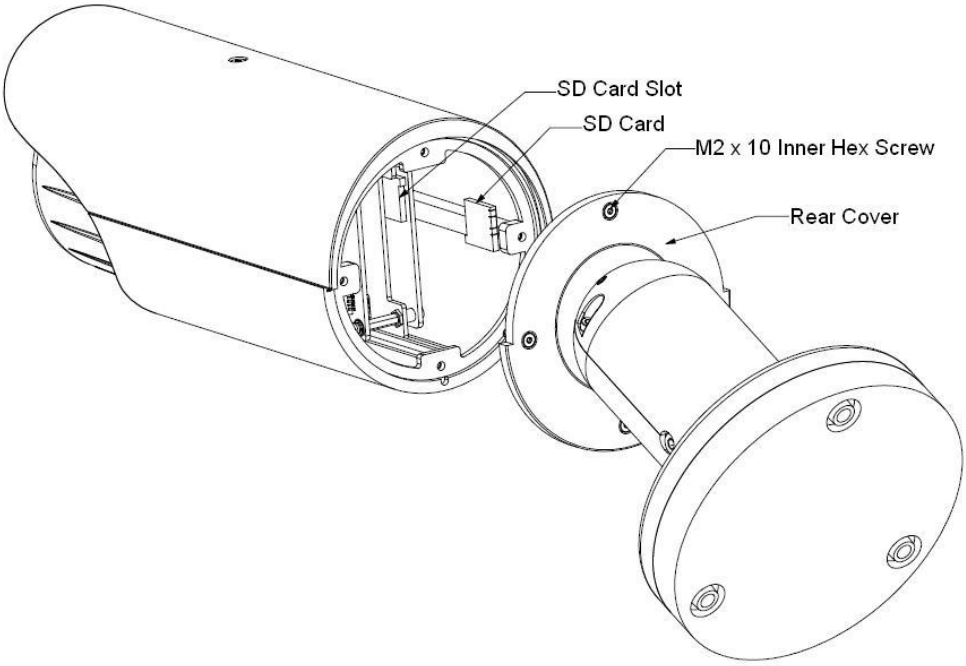

Figure 3-2 Micro SD card installation

3.3 Lens Adjustment

Turn counter clockwise to remove the lens cover, now you can see the iris front and rear control rod. The front control rod is to focus and the rear control rod is to zoom. See Figure 3-3. Please turn clockwise to fix the lens cover back firmly.

Important

- Please remove the sunshield first and remove the lens cover if you can not unfasten the lens cover.
- The lens cover has the waterproof function. Please make sure it is secure after you complete the lens adjustment.
- The motorized zoom lens series product has the default motorized zoom lens. You do not need to adjust manually.

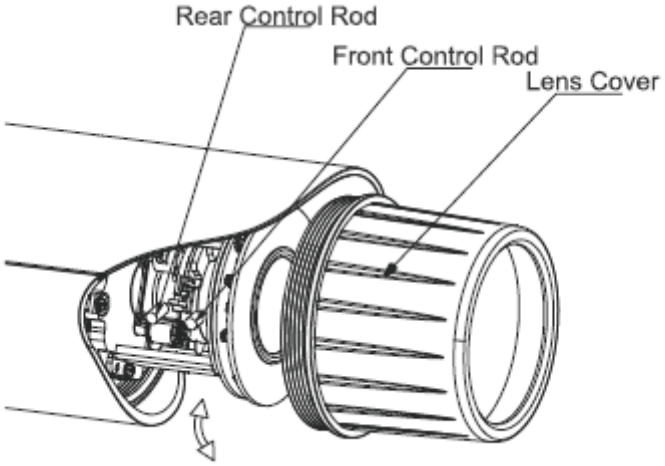

Figure 3-3 Lens adjustment

3.4 Bracket Adjustment

You can use an M4 inner hex screw to control the bracket. Please use the inner hex wrench from the installation accessories bag to unfasten the screw. Please refer to Figure 3-4 or Figure 3-5 according to the actual product. The horizontal angle of the rear cover can rotate 360°, the tilt angle can rotate 90° and the chassis can rotate 360°.

Please use the inner hex wrench to firmly secure the inner hex screw after you complete the setup.

Important

- Please make sure the M4 inner hex screw or M4 inner hex flat tight screws are firm, otherwise it may result in chassis vibration and the camera cannot fix to a specified angle.

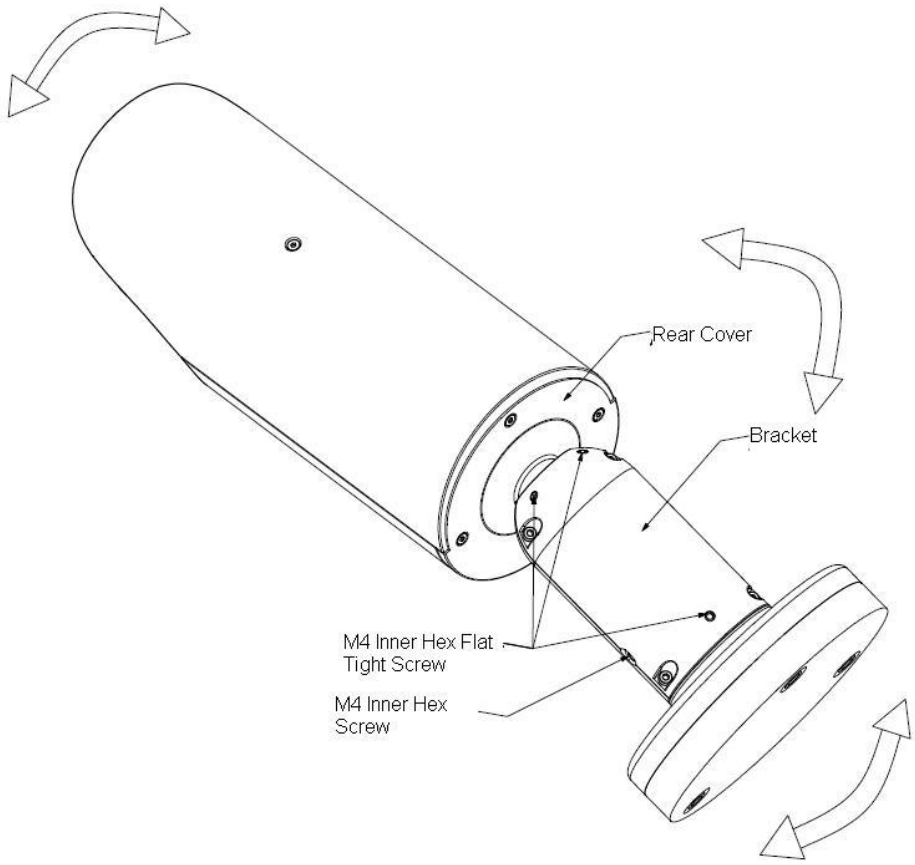

Figure 3-4 Bracket adjustment 1

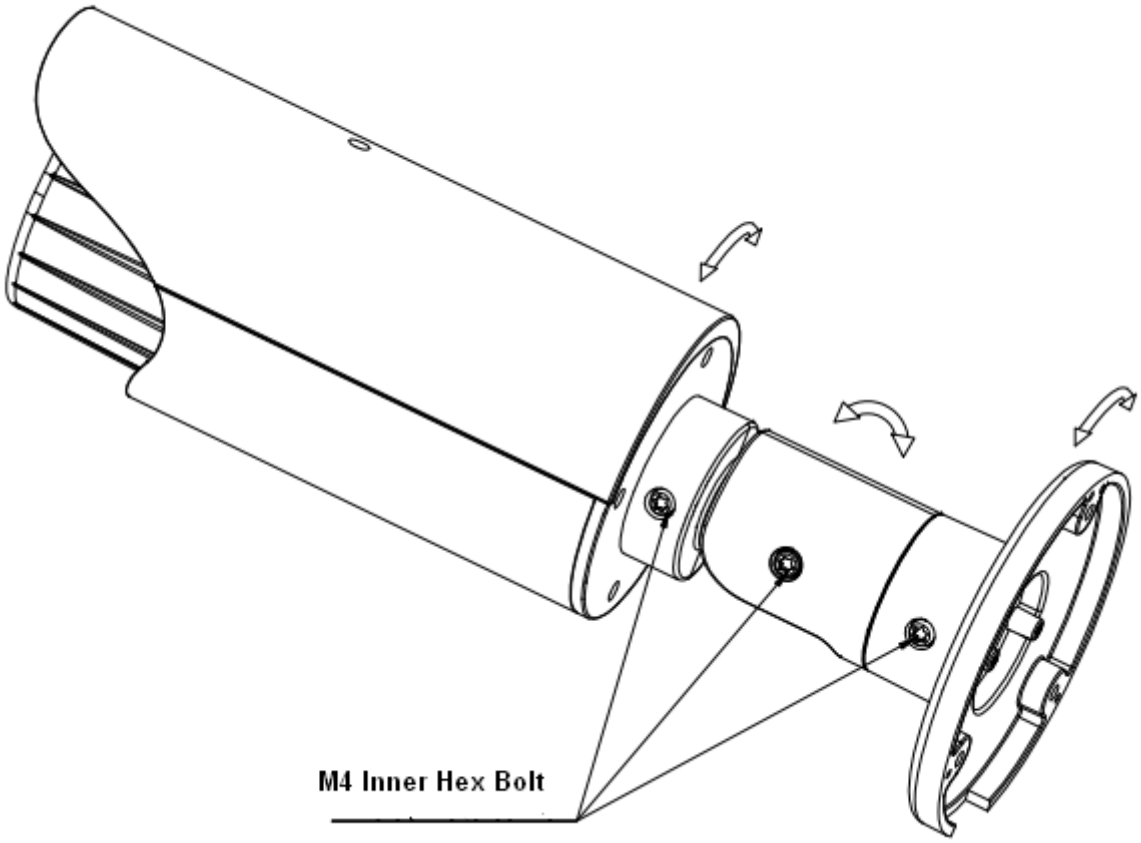

Figure 3-5 Bracket adjustment 2

3.5 OSD Buttons

Please refer to the following contents for detailed information. See Figure 3-6 and Figure 3-7.

- Top button: Focus zoom in
- Bottom button: Focus zoon out.
- Left button: Far.
- Right button: Near.
- Middle button: Auto focus. It is to get clear video.

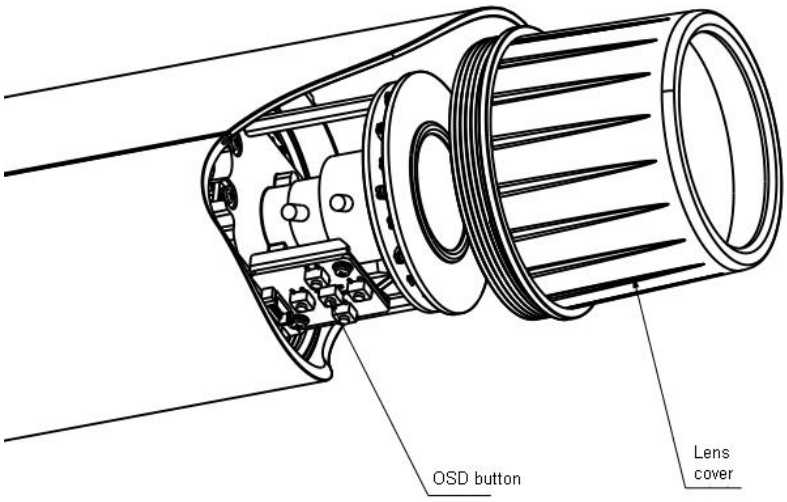

Figure 3-6 OSD button 1

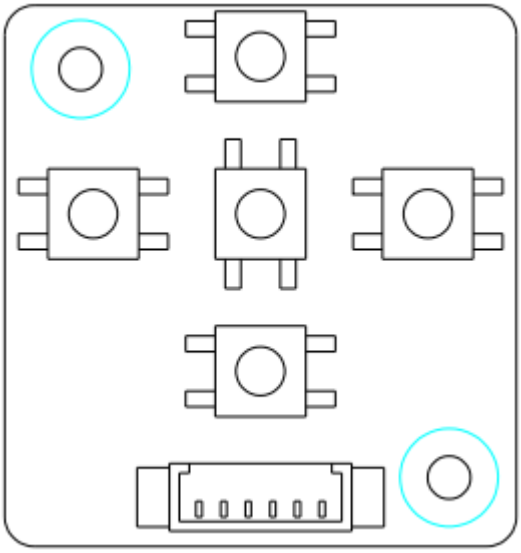

Figure 3-7 OSD button 2

4 Quick Configuration Tool

4.1 Overview

Quick configuration tool can search current IP address, modify IP address. At the same time, you can use it to upgrade the device.
Please note the tool only applies to the IP addresses in the same segment.

4.2 Operation

Double click the “ConfigTools.exe” icon, you can see an interface is shown as in Figure 4-1.
In the device list interface, you can view device IP address, port number, subnet mask, default gateway, MAC address and etc.

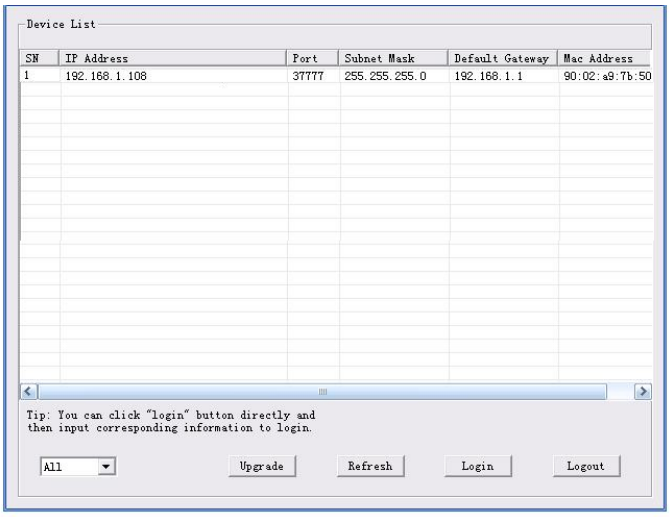

Figure 4-1 Search interface

Select one IP address and then right click mouse, you can see an interface is shown as in Figure 4-2.
Select the “Open Device Web” item; you can go to the corresponding web login interface.

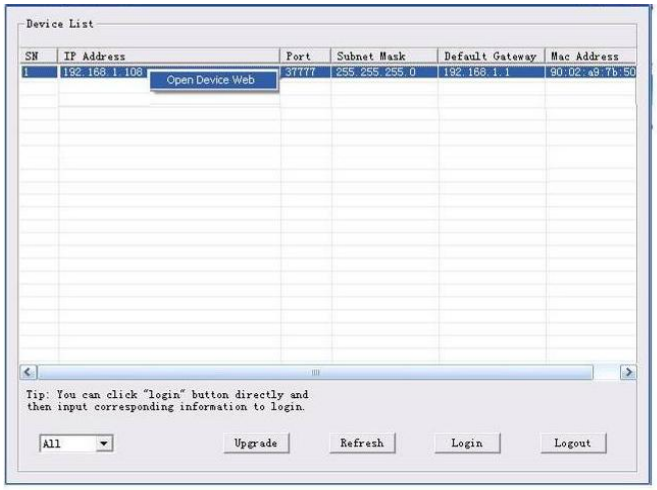

Figure 4-2 Search interface 2

If you want to modify the device IP address without logging in the device web interface, you can go to the configuration tool main interface to set.

In the configuration tool search interface (Figure 4-1), please select a device IP address and then double click it to open the login interface. Or you can select an IP address and then click the Login button to go to the login interface. See Figure 4-3.

In Figure 4-3, you can view device IP address, user name, password and port. Please modify the corresponding information to login.

Please note the port information here shall be identical with the port value you set in TCP port in Web Network interface. Otherwise, you cannot login the device.

If you are using device background upgrade port 3800 to login, other setups are all invalid.

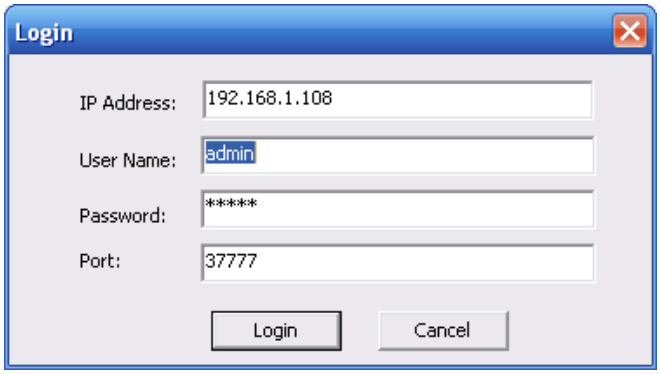

Figure 4-3 Login prompt

After you logged in, the configuration tool main interface is shown as below. See Figure 4-4.

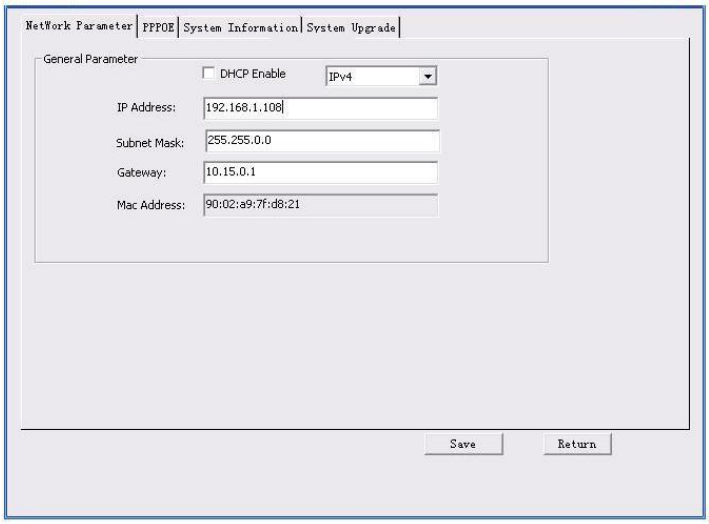

Figure 4-4 Main interface

For detailed information and operation instruction of the quick configuration tool, please refer to the *Quick Configuration Tool User's Manual* included in the resources CD.

5 Web Operation

This series network camera products support the Web access and management via PC.
Web includes several modules: Monitor channel preview, system configuration, alarm and etc.

5.1 Network Connection

Please follow the steps listed below for network connection.

- Make sure the network camera has connected to the network properly.
- Please set the IP address, subnet mask and gateway of the PC and the network camera respectively. Network camera default IP address is 192.168.1.108. Subnet mask is 255.255.255.0. Gateway is 192.168.1.1
- Use order ping ***.***.***.***(* network camera address) to check connection is OK or not.

5.2 Login and Main Interface

Open IE and input network camera address in the address bar. See Figure 5- 1.

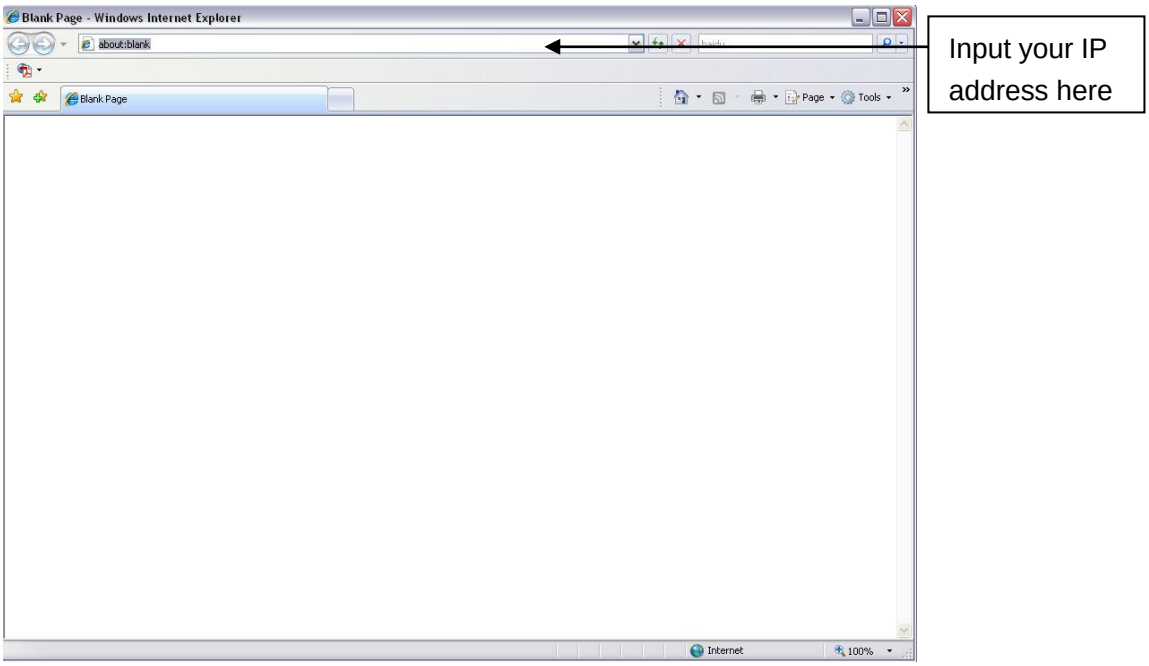

Figure 5- 1 IP address

The login interface is shown as below. See Figure 5- 2.
Please input your user name and password.
Default factory name is admin and password is admin.
Note: For security reasons, please modify your password after you first login.

Figure 5- 2 Web login

After you successfully logged in, please install WEB plug-in unit. Please refer to the Web Operation Manual included in the resource CD for detailed operation instruction.
See Figure 5- 3.

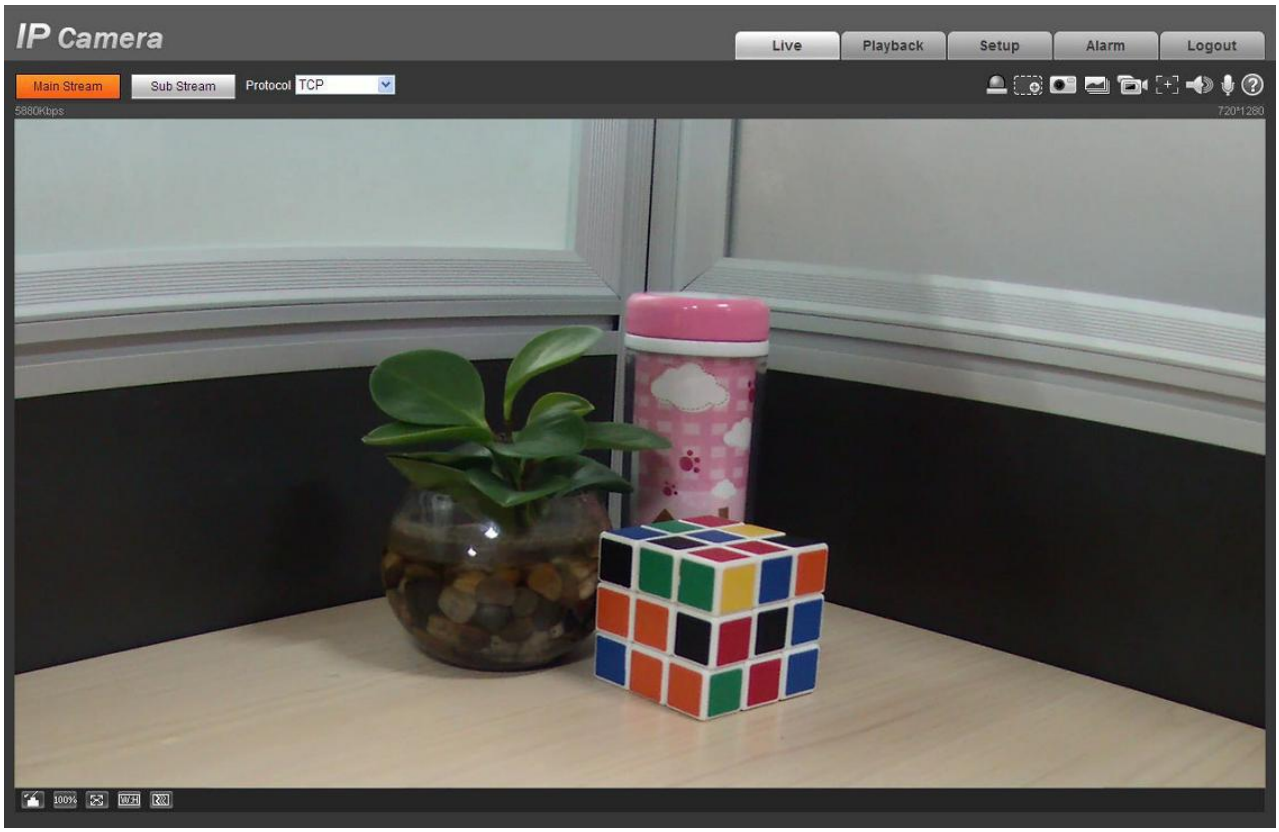

Figure 5- 3 Web monitoring window

6 FAQ

Bug	
I can not boot up the device.	Please click RESET button for at least five seconds to restore factory default setup.
Micro SD card write times	Do not set the Micro SD card as the storage media to storage the schedule record file. It may damage the Micro SD card duration.
I can not use the disk as the storage media.	When disk information is shown as hibernation or capacity is 0, please format it first (Via Web).
I can not upgrade the device via network.	When network upgrade operation failed, you can use port 3800 to continue upgrade.
Recommended Micro SD card brand	Kingston 4GB, Kingston 1GB, Kingston 16GB, Transcend 16GB, SanDisk 1G, SanDisk 4G Usually we recommend the 4GB (or higher) high speed card in case the slow speed results in data loss.
Audio function	Please use active device for the audio monitor input, otherwise there is no audio in the client-end.
To guarantee setup update	After you modified the important setup, please reboot the device via the software to make sure the setup has been updated to the storage medium.
Power adapter	The general power adapter can work ranging from 0℃ to 40 ℃.The device may result in unstable power supply when the temperature exceeds the working temperature. Please replace an industry-level power adapter if you are using in the harsh environments.
I can not fix the bracket firmly.	Please use the S3 inner hex wrench to secure the rear bracket firmly. Please use your hands to test the camera is firm or not after the installation.

7 Appendix Toxic or Hazardous Materials or Elements

Component Name	Toxic or Hazardous Materials or Elements					
	Pb	Hg	Cd	Cr VI	PBB	PBDE
Circuit Board Component	○	○	○	○	○	○
Case	○	○	○	○	○	○
Wire and Cable	○	○	○	○	○	○
Packing Components	○	○	○	○	○	○
Accessories	○	○	○	○	○	○

O: Indicates that the concentration of the hazardous substance in all homogeneous materials in the parts is below the relevant threshold of the SJ/T11363-2006 standard.

X: Indicates that the concentration of the hazardous substance of at least one of all homogeneous materials in the parts is above the relevant threshold of the SJ/T11363-2006 standard. During the environmental-friendly use period (EFUP) period, the toxic or hazardous substance or elements contained in products will not leak or mutate so that the use of these (substances or elements) will not result in any severe environmental pollution, any bodily injury or damage to any assets. The consumer is not authorized to process such kind of substances or elements, please return to the corresponding local authorities to process according to your local government statutes.

Note

- **This user's manual is for reference only. Slight difference may be found in user interface.**
- **All the designs and software here are subject to change without prior written notice.**
- **If there is any uncertainty or controversy, please refer to the final explanation of us.**
- **Please visit our website for more information.**
- **All trademarks and registered trademarks are the properties of their respective owners.**