Mini Network Dome Camera User’s Manual

Version 4.3.1

Welcome

Thank you for purchasing our network camera!
This user's manual is designed to be a reference tool for your system.
Please read the following safeguard and warnings carefully before you use this series product!
Please keep this user's manual well for future reference!

Important Safeguards and Warnings

1．Electrical safety

All installation and operation here should conform to your local electrical safety codes.
The power shall conform to the requirement in the SELV (Safety Extra Low Voltage) and the Limited power source is rated 12V DC or 24V AC in the IEC60950-1. (Refer to general introduction) **Please note: Do not connect these two power supplying sources to the device at the same time; it may result in device damage! The product must be grounded to reduce the risk of electronic shock.**
We assume no liability or responsibility for all the fires or electrical shock caused by improper handling or installation.
We are not liable for any problems caused by unauthorized modification or attempted repair.

2．Transportation security

Heavy stress, violent vibration or water splash are not allowed during transportation, storage and installation.

3．Installation

Do not apply power to the camera before completing installation.
Please install the proper power cut-off device during the installation connection.
Always follow the instruction guide the manufacturer recommended.

4．Qualified engineers needed

All the examination and repair work should be done by the qualified service engineers.
We are not liable for any problems caused by unauthorized modifications or attempted repair.

5．Environment

This series network camera should be installed in a cool, dry place away from direct sunlight, inflammable, explosive substances and etc.
Please keep it away from the electromagnetic radiation object and environment.
Please make sure the CCD (CMOS) component is out of the radiation of the laser beam device. Otherwise it may result in CCD (CMOS) optical component damage.
Please keep the sound ventilation.
Do not allow the water and other liquid falling into the camera.
Thunder-proof device is recommended to be adopted to better prevent thunder.
The grounding studs of the product are recommended to be grounded to further enhance the reliability of the camera.

6. Daily Maintenance

Please shut down the device and then unplug the power cable before you begin daily maintenance work.

Do not touch the CCD (CMOS) optic component. You can use the blower to clean the dust on the lens surface.
Always use the dry soft cloth to clean the device. If there is too much dust, please use the water to dilute the mild detergent first and then use it to clean the device. Finally use the dry cloth to clean the device.
Please put the dustproof cap to protect the CCD (CMOS) component when you do not use the camera.
Dome enclosure is the optical component, do not touch the enclosure when you are installing the device or clean the enclosure when you are doing maintenance work. Please use professional optical clean method to clean the enclosure. Improper enclosure clean method (such as use cloth) may result in poor IR effect of camera with IR function.

7. Accessories

Be sure to use all the accessories recommended by manufacturer.
Before installation, please open the package and check all the components are included.
Contact your local retailer ASAP if something is broken in your package.

Accessory Name	Amount
Network Camera Unit	1
Installation Accessories bag	1
Quick Start Guide	1
CD	1

Table of Contents

1 General Introduction 1

1.1 Overview 1

1.2 Features 1

1.3 Specifications 2

1.3.1 Performance 2

2 Framework 4

2.1 Structure 4

2.2 Dimensions 4

3 Installation 7

3.1 Device Installation 7

3.2 Micro SD Card Installation 9

4 Quick Configuration Tool 11

4.1 Overview 11

4.2 Operation 11

5 Web Operation 13

5.1 Network Connection 13

5.2 Login and Main Interface 13

6 FAQ 15

Appendix Toxic or Hazardous Materials or Elements 16

1 General Introduction

1.1 Overview

This series network camera integrates the traditional camera and network video technology. It adopts audio and video data collection, transmission together. It can connect to the network directly without any auxiliary device.

This series network camera uses standard H.264 video compression technology and MJPEG audio compression technology, which maximally guarantee the audio and video quality.

This series network camera enclosure has the strong resistance capacity, which can guarantee the proper work performance under heavy strike. It supports real-time monitor and motion detect function.

It can be used alone or used in a network area. When it is used lonely, you can connect it to the network and then use a network client-end. Due to its multiple functions and various uses, this series network camera is widely used in many environments such office, bank, road monitor and etc.

1.2 Features

User Management	● Different user rights for each group, one user belongs to one group. ● The user right shall not exceed the group right.
Storage Function	● Support central server backup function in accordance with your configuration and setup in schedule setting ● Support record via Web and the recorded file are storage in the client-end PC. ● Support built-in Micro SD card. Support short-time storage when encounter disconnection. (**For some series only.**) ● Support network storage such as FTP.
Alarm Function	● Real-time respond to video detect as user pre-defined activation setup and exert corresponding message in screen and audio prompt(allow user to pre-record audio file) ● Real-time video detect: motion detect, camera masking. ● Can generate an alarm when network abnormal, Micro SD card abnormal event occurred.
Network Monitor	● Network camera supports one-channel video data transmit to network terminal and then decode. Delay is within 270ms (network bandwidth support needed) ● Max supports 20 connections. ● Adopt the following audio and video transmission protocol: HTTP, TCP, UDP, RTP/RTCP, RTSP and etc. ● Support web access, widely used in WAN.
Network Management	● Realize network camera configuration and management via Ethernet. ● Support device management via web or client-end. ● Support various network protocols.
Power	● External power adapter DC12V ● Support PoE. **Warning！** **Do not connect these two power supplying sources to the device at the same time; it may result in device damage!**
Assistant Function	● Log function ● Day/Night mode auto switch. ● Backlight compensation: screen auto split to realize backlight compensation to adjust the bright.

	● Support digital WDR. ● Support system resource information and running status real-time display. ● Support video watermark function to avoid vicious video modification. ● Support electronic shutter and gain setup. ● Support dual bit stream, support ACF.

1.3 Specifications

1.3.1 Performance

Please refer to the following sheet for network camera performance specification.

Parameter \ Model		ICIP D1300-28A
System	Main Processor	High performance DSP
	OS	Embedded LINUX
	System Resources	Support real-time network, local record, and remote operation at the same time.
	User Interface	Remote operation interface such as WEB, DSS, PSS
	System Status	SD card status, bit stream statistics, log, and software version.
Video Parameter	Image Sensor	1/3-inch CMOS
	Pixel	1280(H)*960(V)
	Day/Night Mode	Support day/night mode switch.
	Gain Control	Fixed/Auto
	White Balance	Manual/Auto
	BLC	Off/BLC/WDR (1-100)/HLC(anti-flicker is outdoor and is valid only when exposure mode is auto with range 1-100)
	Electronic Shutter	Manual/Auto It ranges from 1/3 to 1/100000.
	Video Compression Standard	H.264/H.264H/MJPEG
	Video Frame Rate	PAL: Main stream (1280*960@25fps) Extra stream 1 (704*576@25fps) Extra stream 2 (1280*720@8fps)
		NTSC: Main stream (1280*960@30fps) Extra stream 1 (704*480@30fps) Extra stream 2 (1280*720@1fps)
		Note: Extra stream 2's actual frame depends on max capacity set which can be adjusted within its range.
	Video Bit Rate	H.264H: 40Kbps-8192Kbps adjustable MJPEG: 40Kbps~16384Kbps adjustable and bit rate is adjustable. Support customized setup.
	Video Flip	Support mirror function. Support flip function.
	Snapshot	Max 1f/s snapshot. File extension name is JPEG.
	Privacy Mask	Supports max 4 privacy mask zones
	Interest Area	Support max 4 interest areas.
	Video Setup	Support parameter setup such as bright, contrast.

	Video Information	Channel title, time title, motion detect, privacy mask, overlay.
	Lens	2.8mm/ fixed focus
	Lens Interface	M12. Lens is the default accessories
Video	**Motion Detect**	396 (18*22) detection zones; sensitivity level ranges from 0 to 100; area threshold ranges from 0 to 100. Activation event: video storage, image snapshot, log, email function and etc.
	Video Loss	Activation event: video storage, image snapshot, log, email function and etc.
Record and Backup	**Record Priority**	Manual> Video detect>Schedule
	Local Storage	Support Micro SD (64GB) card storage, NAS storage
Network	**Wire Network**	1-channel wire Ethernet port, 10/100 Base-T Ethernet
	Network Protocol	Standard HTTP, TCP/IP, IPv4/IPv6, ARP, IGMP, ICMP, RTSP, RTP, UDP, SMTP, FTP, DHCP, DNS, DDNS, PPPOE, UPNP, NTP, Bonjour, SNMP, QoS, 802.1x.
	Platform interface Standard	PSIA, ONVIF
	Remote Operation	Monitor, system setup, log information, maintenance , upgrade and etc
AUX Interface	**Reset**	Built-in RESET button
General Parameter	**Power**	Support DC12V and PoE Note: 05 series does not support PoE.
	Power Consumption	DC 12V 2.5W MAX
	Working Temperature	-20℃~+60℃
	Working Humidify	≤95%
	Dimensions(mm)	¢110×54
	Weight	0.25Kg
	Installation	Installed in the places such as wall or the ceiling

2 Framework

2.1 Structure

Please refer to the following figure for detailed information. See Figure 2-1.

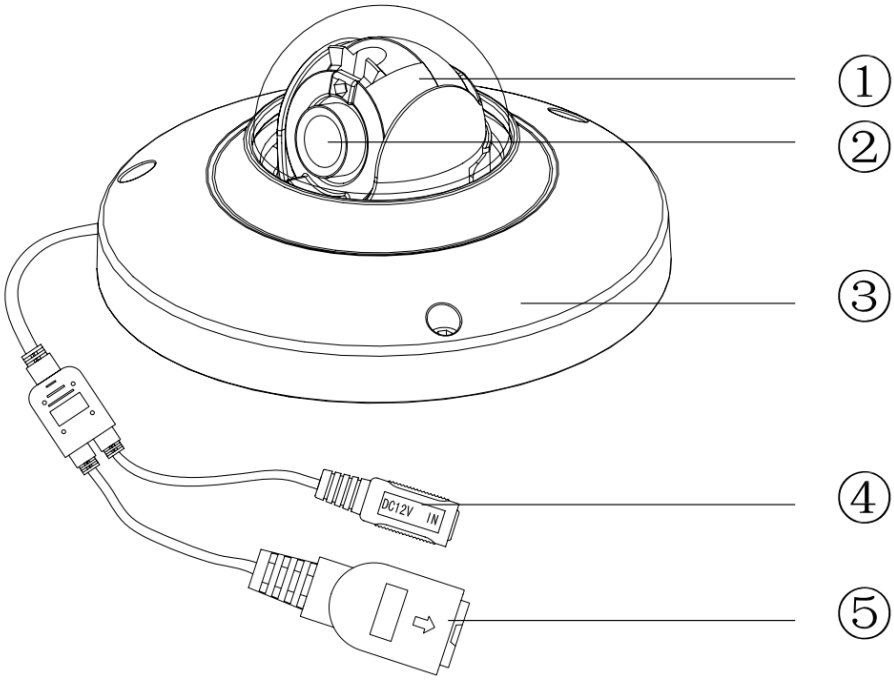

Figure 2-1 Structure

Please refer to the following sheet for detailed structure information.

SN	Name
1	X-Y-Z rotation module
2	Device lens
3	Dome camera enclosure

Please refer to the following sheet for detailed port information.

SN	Name	Function
4	Power input port	Connect to the DC 12+ power to input the power.
5	Network port	Network data input, output and PoE.

2.2 Dimensions

Please refer to the following figure for the dimension information. The unit is mm. See Figure 2-2 through Figure 2-4.

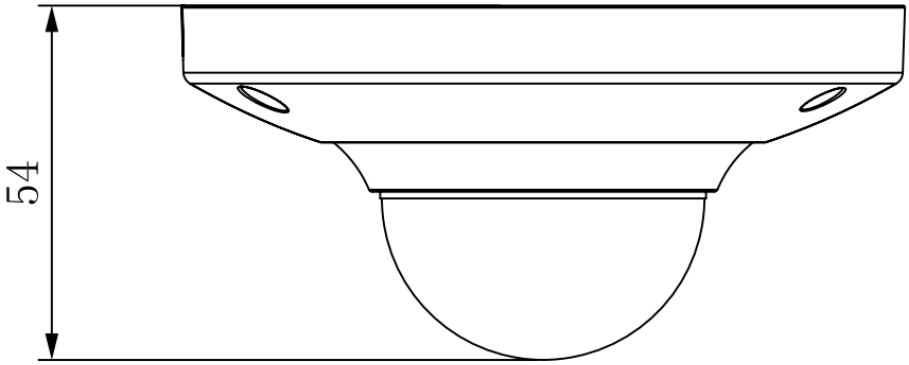

Figure 2-2 Dimension illustration 1

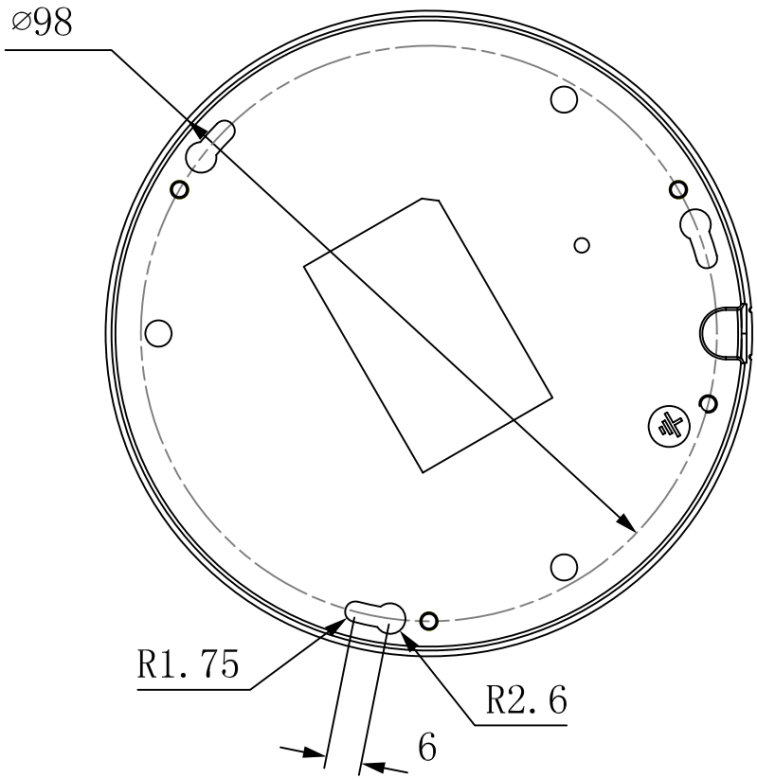

Figure 2-3 Dimension illustration 2

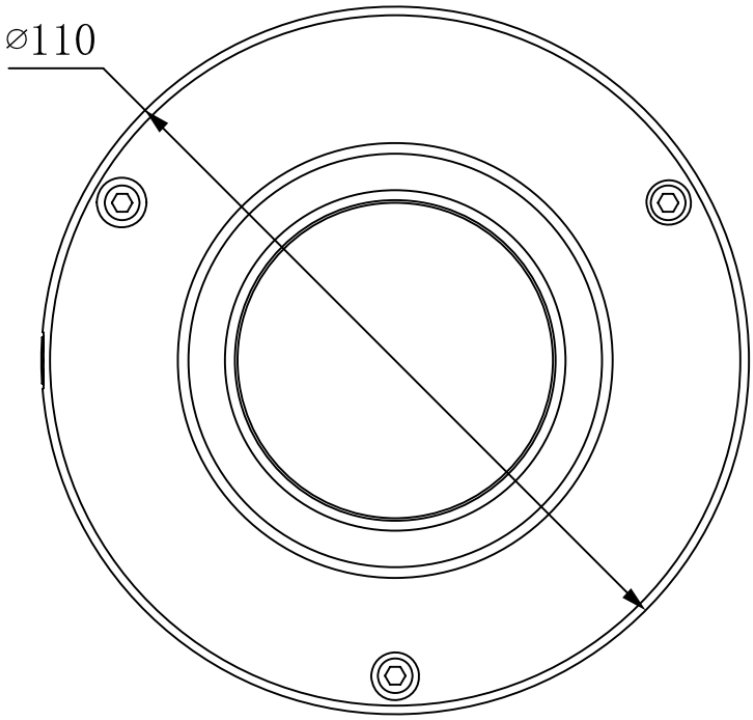

Figure 2-4 Dimension illustration 3

3 Installation

3.1 Device Installation

Important

Please make sure the installation surface can min support the 3X weight of the camera and the bracket.

Please refer to the steps listed below.

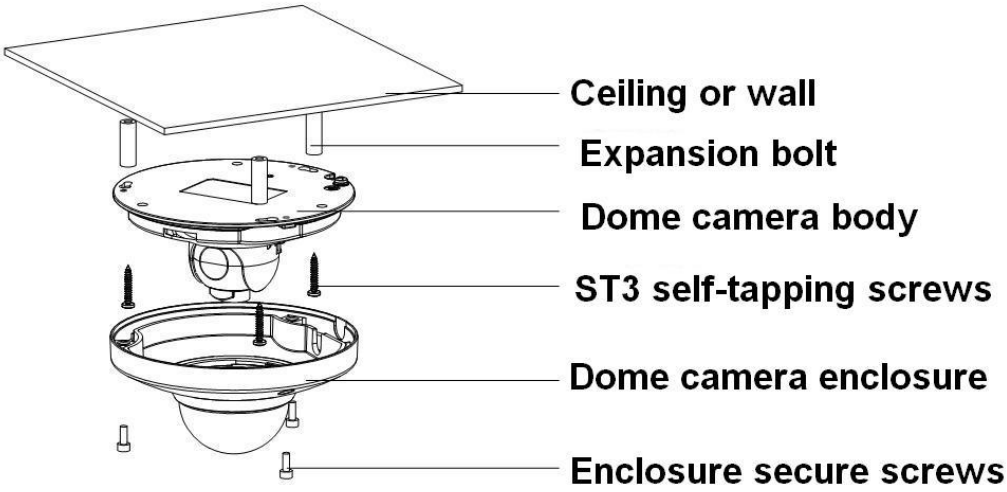

Figure 3-1 Device installation illustration 1

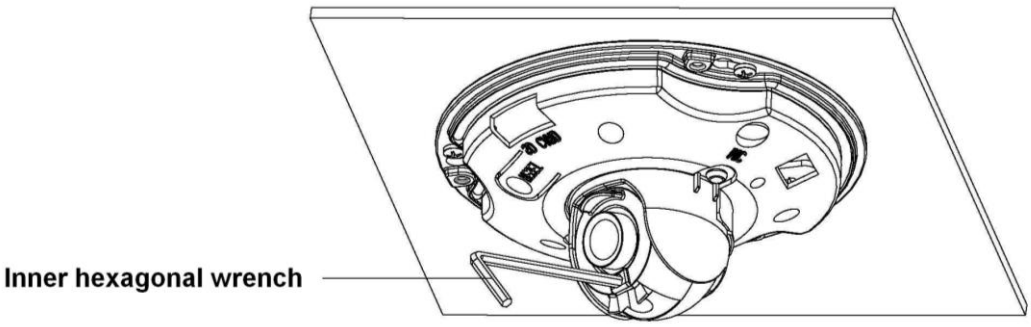

Figure 3-2 Device installation illustration 2

Step1

Use the inner hexagonal wrench (provided) to loose the three inner hexagon screws in the dome cover and then open the cover.

Step 2

Please take the installation position map in the accessories bag, and then paste it on the ceiling or the wall according to your monitor area requirements.

Step 3

Draw and then dig three plastic expansion bolts holes on ceiling or other installation surface and then insert three expansion bolts in the holes. Secure these three bolts firmly.

Note:
Please dig a “cable exit hole” in the surface according to the installation position map if you want to draw out the cable from the top of the installation surface. You need to use the proper tool to open up the side port of the U-cable channel of the dome camera pedestal if you want to draw out the cable from the side port of the cable channel when you are installing the device cable. And then you can draw out the cable from the cable channel of the pedestal.

Step 4
Adjust the device installation pedestal to the proper position and then draw the cable through the cable exit you just dug in the ceiling (wall). Line up the TOP direction of the device to the installation position map and then line up the three screw holes in the device pedestal to the three plastic expansion bolt holes in the installation position. Put the three self-tapping screws in the three plastic expansion bolts firmly. Now the dome camera is secure in the installation surface.

Step 5
Loosen the two M3 secure screws of the lens rotation structure (Do not remove, loosen a little bit will be OK.). Use the inner hexagonal wrench to insert them to the inner hexagonal holes and then use the wrench to turn the lens. Adjust the lens to the proper monitor angle and then secure the screws of the lens rotation structure. The lens adjust angle ranges are: flip (0°~+75°), video pan rotation (-15°~+15°) , video rotation angle(-15°~+15°).

Step 6
Line up the dome camera cover to the cable exits and put the cover back. Use the inner hexagonal wrench to secure the three inner hexagonal screws firmly. Now the installation completed.

Note:
The device GND cable can effectively enhance the device reliability. The GND hole is near the cable exit of the back of the enclosure. The GND screw specification is M3. See Figure 3-3.

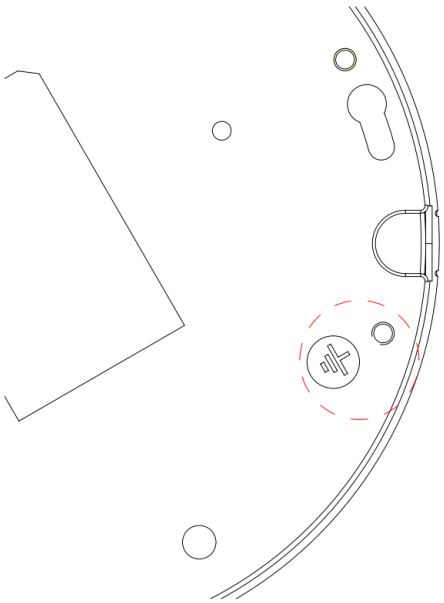

Figure 3-3 Device installation illustration 3

3.2 Micro SD Card Installation

Important

Some series products do not support the Micro SD card storage function.

Please shut down the power and then turn off the device before you install the Micro SD card.

Step 1

Please refer to the step 1 in chapter 3.1 to open the device.

Step 2

Find the “Micro SD CARD” indicator in the enclosure. Adjust the Micro SD card to the proper direction and then install. See Figure 3-4.

Step 3

Please refer to the step 6 in chapter 3.1 to complete the installation.

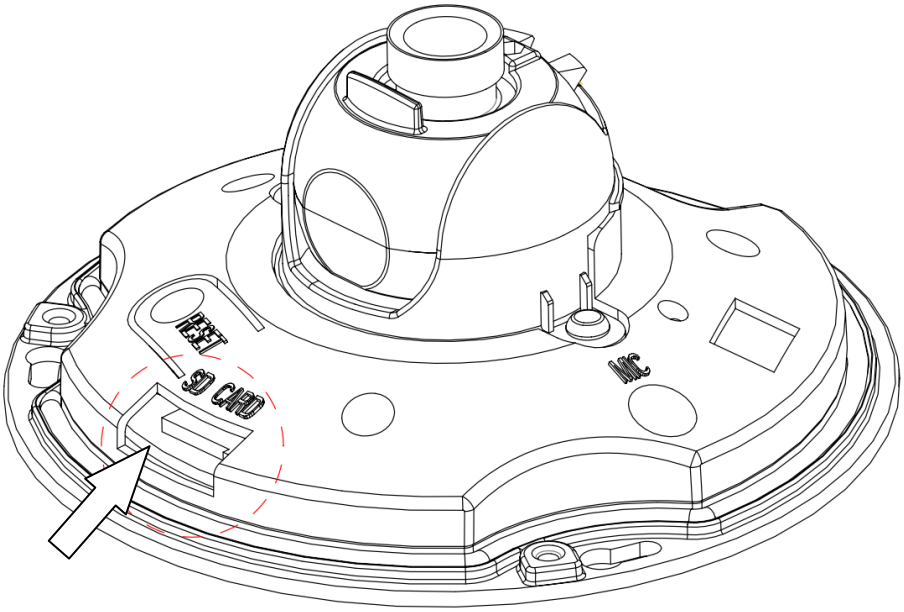

Figure 3-4 Device installation illustration 4

4 Quick Configuration Tool

4.1 Overview

Quick configuration tool can search current IP address, modify IP address. At the same time, you can use it to upgrade the device.
Please note the tool only applies to the IP addresses in the same segment.

4.2 Operation

Double click the “ConfigTools.exe” icon, you can see an interface is shown as in Figure 4-1.
In the device list interface, you can view device IP address, port number, subnet mask, default gateway, MAC address and etc.

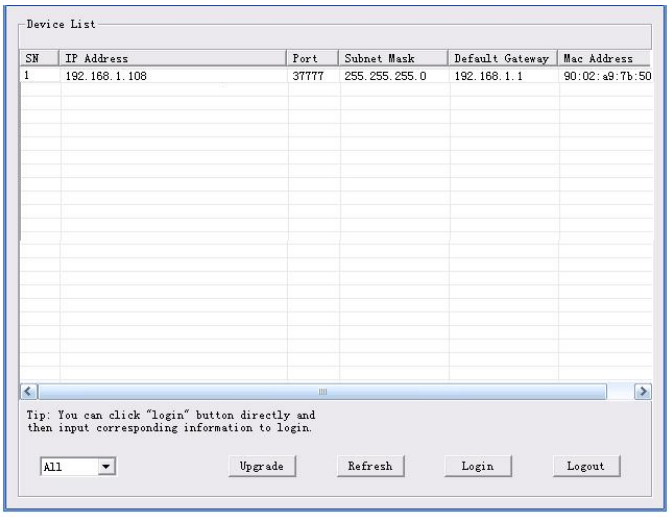

Figure 4-1 Search interface

Select one IP address and then right click mouse, you can see an interface is shown as in Figure 4-2.
Select the “Open Device Web” item; you can go to the corresponding web login interface.

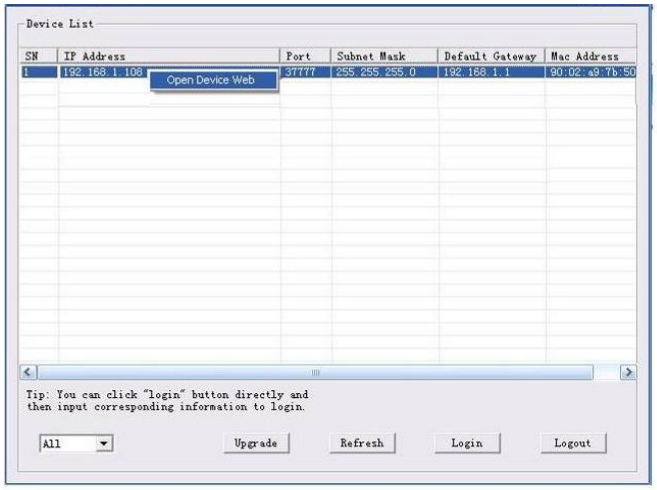

Figure 4-2 Search interface 2

If you want to modify the device IP address without logging in the device web interface, you can go to the configuration tool main interface to set.

In the configuration tool search interface (Figure 4-1), please select a device IP address and then double click it to open the login interface. Or you can select an IP address and then click the Login button to go to the login interface. See Figure 4-3.

In Figure 4-3, you can view device IP address, user name, password and port. Please modify the corresponding information to login.

Please note the port information here shall be identical with the port value you set in TCP port in Web Network interface. Otherwise, you cannot login the device.

If you are using device background upgrade port 3800 to login, other setups are all invalid.

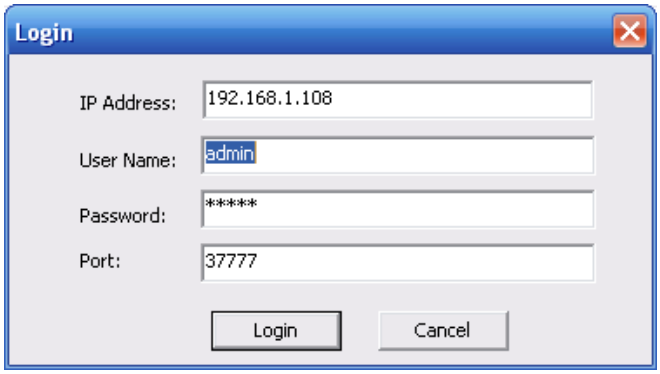

Figure 4-3 Login prompt

After you logged in, the configuration tool main interface is shown as below. See Figure 4-4.

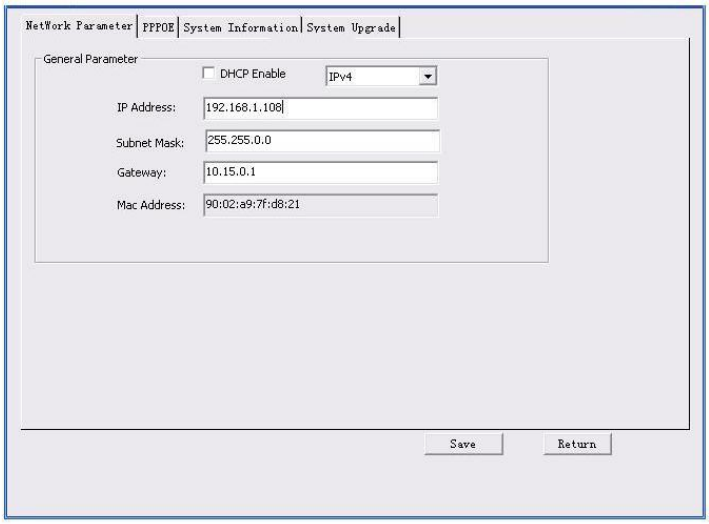

Figure 4-4 Main interface

For detailed information and operation instruction of the quick configuration tool, please refer to the *Quick Configuration Tool User's Manual* included in the resources CD.

5 Web Operation

This series network camera products support the Web access and management via PC.
Web includes several modules: Monitor channel preview, system configuration, alarm and etc.

5.1 Network Connection

Please follow the steps listed below for network connection.

- Make sure the network camera has connected to the network properly.
- Please set the IP address, subnet mask and gateway of the PC and the network camera respectively. Network camera default IP address is 192.168.1.108. Subnet mask is 255.255.255.0. Gateway is 192.168.1.1
- Use order ping ***.***.***.***(* network camera address) to check connection is OK or not.

5.2 Login and Main Interface

Open IE and input network camera address in the address bar. See Figure 5- 1.

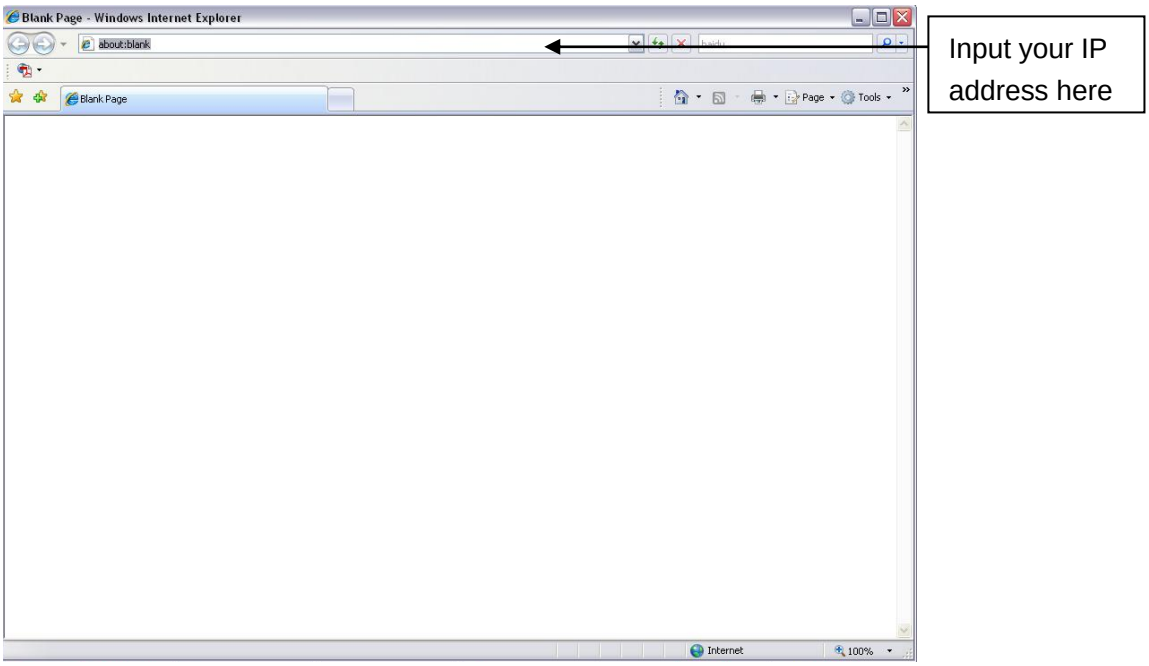

Figure 5- 1 IP address

The login interface is shown as below. See Figure 5- 2.
Please input your user name and password.
Default factory name is admin and password is admin.
Note: For security reasons, please modify your password after you first login.

Figure 5- 2 Web login

After you successfully logged in, please install WEB plug-in unit. Please refer to the Web Operation Manual included in the resource CD for detailed operation instruction.
See Figure 5- 3.

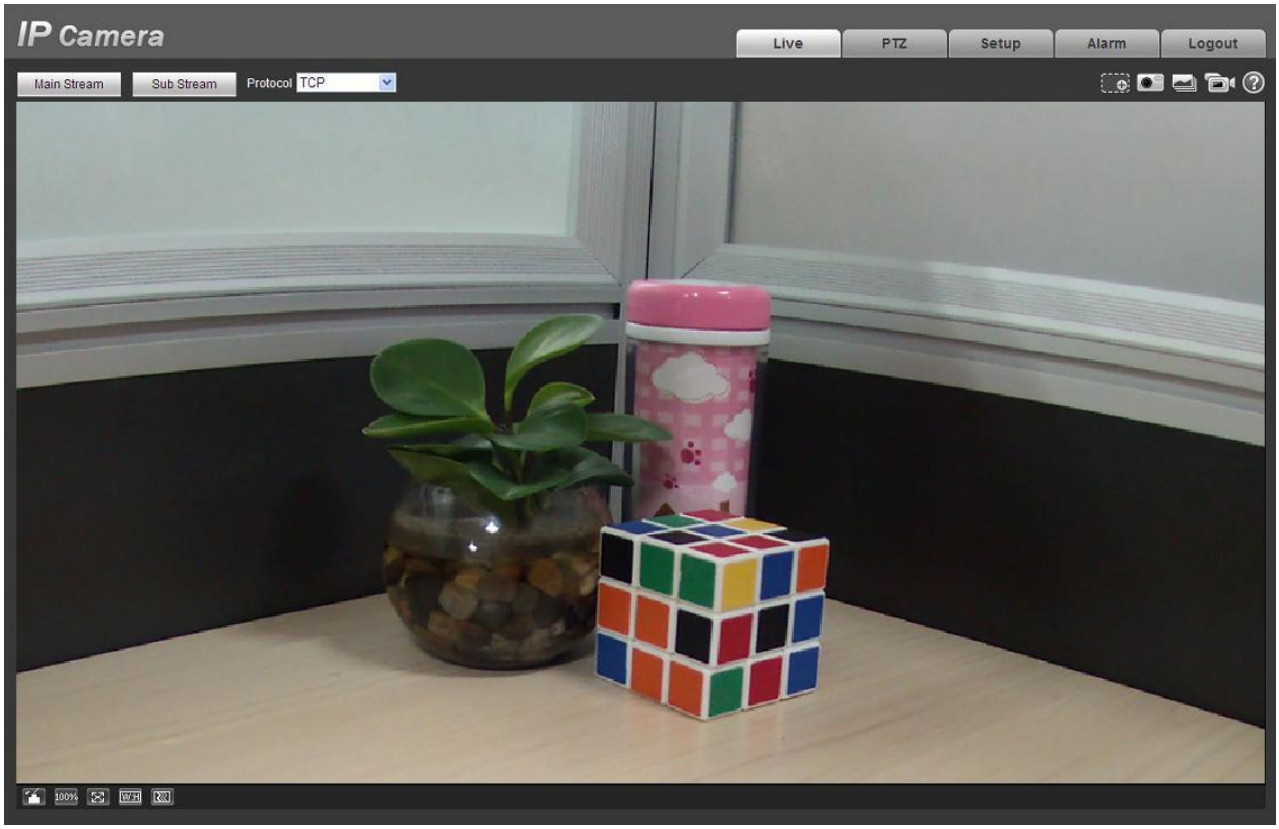

Figure 5- 3 Web monitoring window

6 FAQ

Bug	
I can not boot up the device.	Please click RESET button for at least five seconds to restore factory default setup.
Micro SD card write times	Do not set the Micro SD card as the storage media to storage the schedule record file. It may damage the Micro SD card duration.
I can not use the disk as the storage media.	When disk information is shown as hibernation or capacity is 0, please format it first (Via Web).
I can not upgrade the device via network.	When network upgrade operation failed, you can use port 3800 to continue upgrade.
Recommended Micro SD card brand	Kingston 4GB, Kingston 1GB, Kingston 16GB, Transcend 16GB, SanDisk 1G, SanDisk 4G. Usually we recommend the 4GB (or higher) or industry-level high speed card in case the slow speed results in data loss.
Save setup	Please use active device for the audio monitor input, otherwise there is no audio in the client-end.
Power adapter	General power adapter work temperature ranges from 0℃ to 40℃. It may result in unstable performance if it works in the extremely too hot or too cold environments. In this case, you may need to use the industrial-level power adapter.

Appendix Toxic or Hazardous Materials or Elements

Component Name	Toxic or Hazardous Materials or Elements					
	Pb	Hg	Cd	Cr VI	PBB	PBDE
Circuit Board Component	○	○	○	○	○	○
Device Construction Material	○	○	○	○	○	○
Wire and Cable	○	○	○	○	○	○
Packing Components	○	○	○	○	○	○
Accessories	○	○	○	○	○	○

O: Indicates that the concentration of the hazardous substance in all homogeneous materials in the parts is below the relevant threshold of the SJ/T11363-2006 standard.

X: Indicates that the concentration of the hazardous substance of at least one of all homogeneous materials in the parts is above the relevant threshold of the SJ/T11363-2006 standard. During the environmental-friendly use period (EFUP) period, the toxic or hazardous substance or elements contained in products will not leak or mutate so that the use of these (substances or elements) will not result in any severe environmental pollution, any bodily injury or damage to any assets. The consumer is not authorized to process such kind of substances or elements, please return to the corresponding local authorities to process according to your local government statutes.

Note

- **This user's manual is for reference only. Slight difference may be found in user interface.**
- **All the designs and software here are subject to change without prior written notice.**
- **If there is any uncertainty or controversy, please refer to the final explanation of us.**
- **Please visit our website for more information.**