HD (IR) Vandal Proof Network Dome Camera User’s Manual

Version 1.5.1

Welcome

Thank you for purchasing our network camera!

This user’s manual is designed to be a reference tool for your system.

Please read the following safeguard and warnings carefully before you use this series product!

Please keep this user’s manual well for future reference!

Important Safeguards and Warnings

1．Electrical safety

All installation and operation here should conform to your local electrical safety codes.
The power shall conform to the requirement in the SELV (Safety Extra Low Voltage) and the Limited power source is rated 12V DC or 24V AC in the IEC60950-1. (Refer to general introduction)
Please note: Do not connect two power supplying sources to the device at the same time; it may result in device damage! The product must be grounded to reduce the risk of electronic shock.
We assume no liability or responsibility for all the fires or electrical shock caused by improper handling or installation.
We are not liable for any problems caused by unauthorized modification or attempted repair.

2．Transportation security

Heavy stress, violent vibration or water splash are not allowed during transportation, storage and installation.

3．Installation

Do not apply power to the camera before completing installation.
Please install the proper power cut-off device during the installation connection.
Always follow the instruction guide the manufacturer recommended.

4．Qualified engineers needed

All the examination and repair work should be done by the qualified service engineers.
We are not liable for any problems caused by unauthorized modifications or attempted repair.

5．Environment

This series network camera should be installed in a cool, dry place away from direct sunlight, inflammable, explosive substances and etc.
Please keep it away from the electromagnetic radiation object and environment.
Please make sure the CCD (CMOS) component is out of the radiation of the laser beam device. Otherwise it may result in CCD (CMOS) optical component damage.
Please keep the sound ventilation.
Do not allow the water and other liquid falling into the camera.
Thunder-proof device is recommended to be adopted to better prevent thunder.
The grounding studs of the product are recommended to be grounded to further enhance the reliability of the camera.

6. Daily Maintenance

Please shut down the device and then unplug the power cable before you begin daily maintenance work.

Do not touch the CCD (CMOS) optic component. You can use the blower to clean the dust on the lens surface.
Always use the dry soft cloth to clean the device. If there is too much dust, please use the water to dilute the mild detergent first and then use it to clean the device. Finally use the dry cloth to clean the device.
Please put the dustproof cap to protect the CCD (CMOS) component when you do not use the camera.
Dome enclosure is the optical component, do not touch the enclosure when you are installing the device or clean the enclosure when you are doing maintenance work. Please use professional optical clean method to clean the enclosure. Improper enclosure clean method (such as use cloth) may result in poor IR effect of camera with IR function.

7. Accessories

Be sure to use all the accessories recommended by manufacturer.
Before installation, please open the package and check all the components are included.
Contact your local retailer ASAP if something is broken in your package.

Accessory Name	Amount
Network Camera	1
Quick Start Guide	1
Installation Accessories Bag	1
CD	1

Table of Contents

1 General Introduction 1

1.1 Overview 1

1.2 Features 1

1.3 Specifications 2

1.3.1 Performance 2

2 Structure 4

2.1 Dimensions 4

2.2 Port Description 4

2.3 Bidirectional talk 10

2.3.1 Device-end to PC-end 10

2.3.2 PC-end to the Device-end 10

2.4 Alarm Setup 11

3 Installation 13

3.1 Device Installation Introduction 13

3.2 Device Installation Steps 13

3.2.1 General Installation 13

3.2.2 Manual Zoom Lens Focus Operation 17

3.2.3 Side Cable Exit 18

3.2.4 Cable Connection 18

3.3 Micro SD Card Installation 19

4 Quick Configuration Tool 21

4.1 Overview 21

4.2 Operation 21

5 Web Operation 23

5.1 Network Connection 23

5.2 Login and Main Interface 23

6 FAQ 25

Appendix Toxic or Hazardous Materials or Elements 26

1 General Introduction

1.1 Overview

This series network camera integrates the traditional camera and network video technology. It adopts audio and video data collection, transmission together. It can connect to the network directly without any auxiliary device.

This series network camera uses standard H.264 and MJPEG video compression technology and G.711a audio compression technology, which maximally guarantee the audio and video quality.

This series network camera enclosure has the strong resistance capacity, which can guarantee the proper work performance under heavy strike. It supports real-time monitor and listening at the same time. It supports analog video output and dual-way bidirectional talk.

It can be used alone or used in a network area. When it is used lonely, you can connect it to the network and then use a network client-end. Due to its multiple functions and various uses, this series network camera is widely used in many environments such office, bank, road monitor and etc.

1.2 Features

User Management	● Different user rights for each group, one user belongs to one group. ● The user right shall not exceed the group right.
Storage Function	● Support central server backup function in accordance with your configuration and setup in alarm or schedule setting ● Support record via Web and the recorded file are storage in the client-end PC. ● Support built-in Micro SD card. ● Support local Micro SD card hot swap, support short-time storage when encounter disconnection.
Alarm Function	● Real-time respond to external local alarm input and video detect as user pre-defined activation setup and exert corresponding message in screen and audio prompt(allow user to pre-record audio file) ● Real-time video detect: motion detect, tampering. ● Can generate an alarm when network abnormal, Micro SD card abnormal event occurred.
Network Monitor	● Network camera supports one-channel audio/video data transmit to network terminal and then decode. Delay is within 270ms (network bandwidth support needed) ● Max supports 20 connections. ● Adopt the following audio and video transmission protocol: HTTP, TCP, UDP, MULTICAST, RTP/RTCP, RTSP and etc. ● Support web access, widely used in WAN.
Network Management	● Realize network camera configuration and management via Ethernet. ● Support device management via web or client-end. ● Support various network protocols.
Peripheral Equipment	● Support the on-off alarm device to alarm via the sound or the light.
Power	● External power adapter DC12V/AC 24V ● Support PoE. **Warning！** **Do not connect these two power supplying sources to the device at the same**

	time; it may result in device damage!
Assistant Function	● Log function ● Support PAL/NTSC ● Day/Night mode auto switch (electromagnetic ICR switch). ● Support iris auto adjust. ● Built-in IR light. Support IR night vision. ● Backlight compensation: screen auto split to realize backlight compensation to adjust the bright. ● Support electronic shutter and gain setup. ● Support video watermark function to avoid vicious video modification.

1.3 Specifications

1.3.1 Performance

Please refer to the following sheet for network camera performance specification.

Parameter \ Model		ICIP D1300VIR
System	Main Processor	TI Davinci high performance DSP
	OS	Embedded LINUX
	System Resources	Support real-time network, local record, and remote operation at the same time.
	User Interface	Remote operation interface such as WEB, DSS, PSS
	System Status	Micro SD card status, bit stream statistics, log, and software version.
Video Parameter	Image Sensor	1/3-inch CMOS
	Pixel	1280(H)*960(V)
	Day/Night Mode	Support day/night mode switch and electromagnetic IR-CUT at the same time.
	Auto Iris	DC drive
	Gain Control	Manual/Auto
	White Balance	Manual/Auto
	BLC	On/Off
	Electronic Shutter	Manual/Auto It ranges from 1/3 to 1/10000.
	Motorized Focus	Not support
	Video Compression Standard	H.264 /H.264H/H.264B/MJPEG Note: Some versions do not support H.264H.
	Video Frame Rate	PAL: Main stream（1280*960@25fps） Extra stream（704*576@25fps） Main stream（1280*720@25fps） extra stream（704*576@25fps） NTSC: Main stream（1280*960@30fps） extra stream（704×480@30fps） Main stream（1280*720@30fps） extra stream（704×480@30fps）

	Video Bit Rate	H.264: 56Kbps-8192Kbps. It is adjustable MJPEG adjustable and bit rate is adjustable. Support customized setup.
	Video Flip	Support mirror. Support flip function.
	Snapshot	Max 1f/s snapshot. File extension name is JPEG.
	Privacy Mask	Supports max 4 privacy mask zones
	Video Setup	Support parameter setup such as bright, contrast.
	Video Information	Channel title, time title, motion detect, tampering.
	Lens	φ 14 interface, 2.8~12mm@F1.4
	Lens Interface	CS. Lens is the default accessories.
Audio	**Audio Input**	1-channe, RCA audio input
	Audio Output	1-channel RCA audio output
	Bidirectional Talk Input	Reuse the first audio input channel
	Audio Bit Rate	16kbps 16bit
	Audio Compression Standard	G.711a/G.711Mu
Video	**Motion Detect**	396 (18*22) detection zones; sensitivity level ranges from 0 to 100; area threshold ranges from 0 to 100. Activation event: alarm device, audio/video storage, image snapshot, log, email function and etc.
	Video Loss	Activation event, alarm device, audio/video storage, image snapshot, log, email function and etc.
Alarm Input		1-channel input，1-channel output
Record and Backup	**Record Priority**	Manual>External alarm >Video detect>Schedule
	Storage Management	Support Micro SD card storage, NAS storage
Network	**Wire Network**	1-channel wire Ethernet port, 10/100 Base-T Ethernet
	Network Protocol	HTTP,TCP,ARP,RTSP,RTP,UDP,RTCP,SMTP,FTP,DHCP,DNS,DDNS,PPPOE,IPv4/v6,SNMP,QoS,UPnP,NTP, HTTPS, 802.1x, Bonjour
	Protocol	PSIA (optional), ONVIF
	Remote Operation	Monitor, system setup, log information, maintenance , upgrade and etc
AUX Interface	**Video Output**	1-channel analog video output，BNC port
	Reset	Built-in RESET button
	IR light	IR distance 10 to 20 meters (For IPC-HDBW series product only)
General Parameter	**Power**	Support AC24V/DC12V power. PoE
	Power Consumption	General series: below 3W. IR series: below 5W.
	Working Temperature	-20℃~+60℃
	Working Humidify	≤95%
	Dimensions(mm)	¢151x119
	Weight	1.25Kg
	Installation	Support various installation modes

2 Structure

2.1 Dimensions

You can refer to the following figures for dimension information. The Unit is mm. See Figure 2-1 and Figure 2-2.

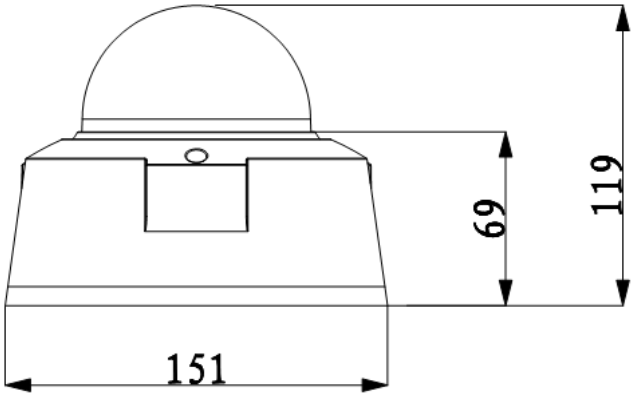

Figure 2-1 Dimension 1

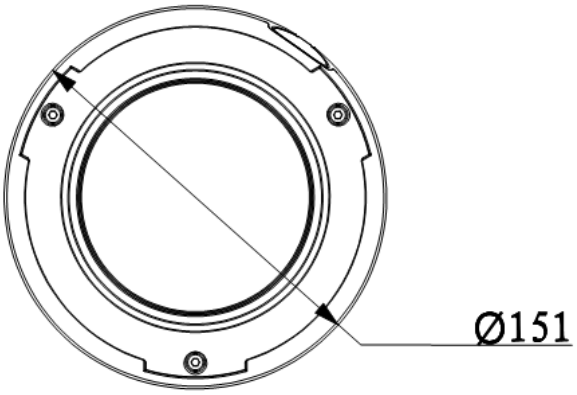

Figure 2-2 Dimension 2

2.2 Port Description

For the non-IR series product, the interface is shown as in Figure 2-3 and Figure 2-4.

Note：

Figure in this chapter are all for reference only, and please refer to model 1-a and 1-b according to actual product.

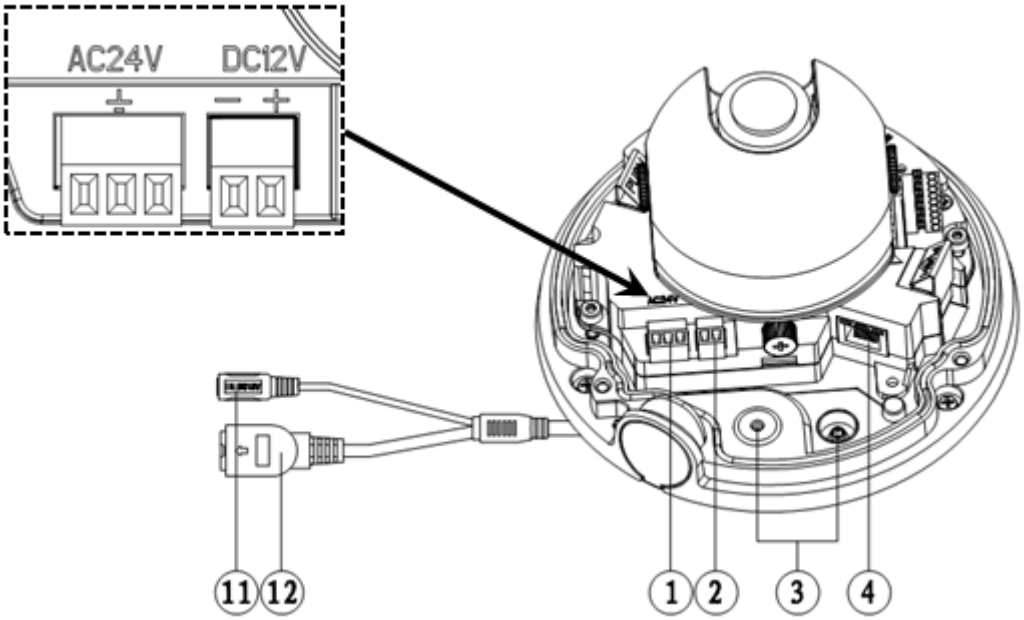

Figure 2-3 Camera internal without IR (1-a)

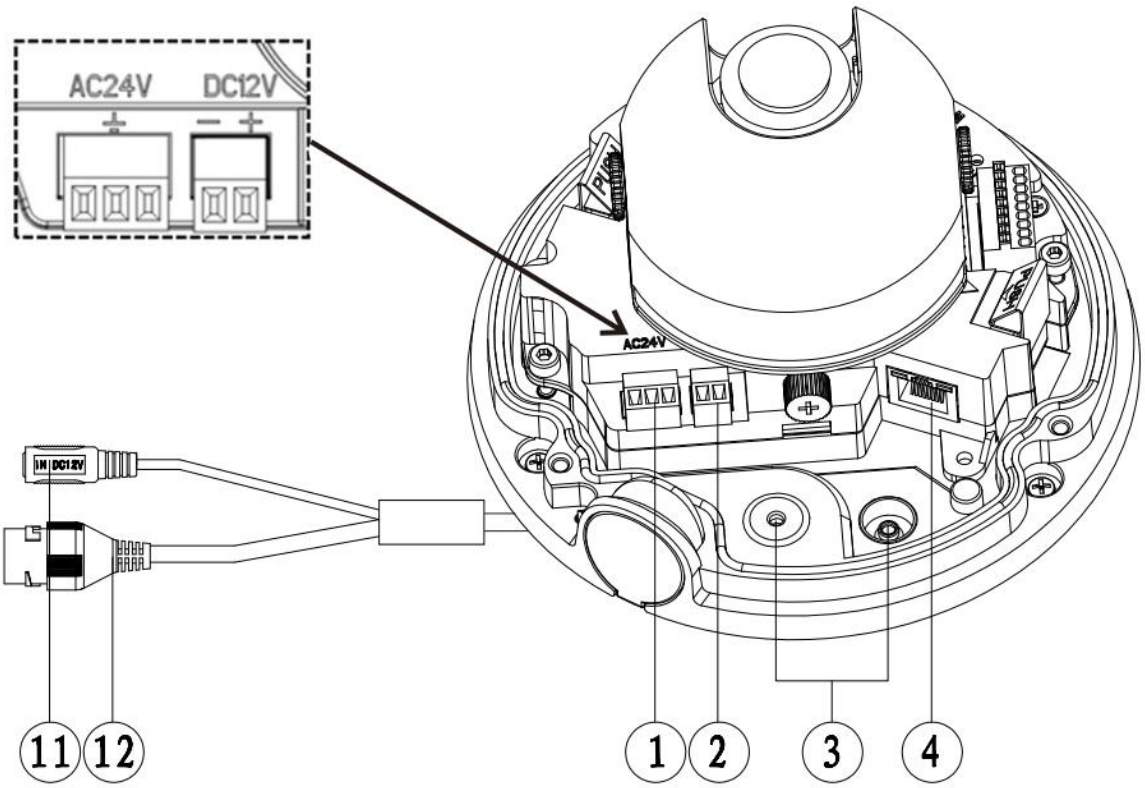

Figure 2-4 Camera internal without IR (1-b)

See Figure 2-5.

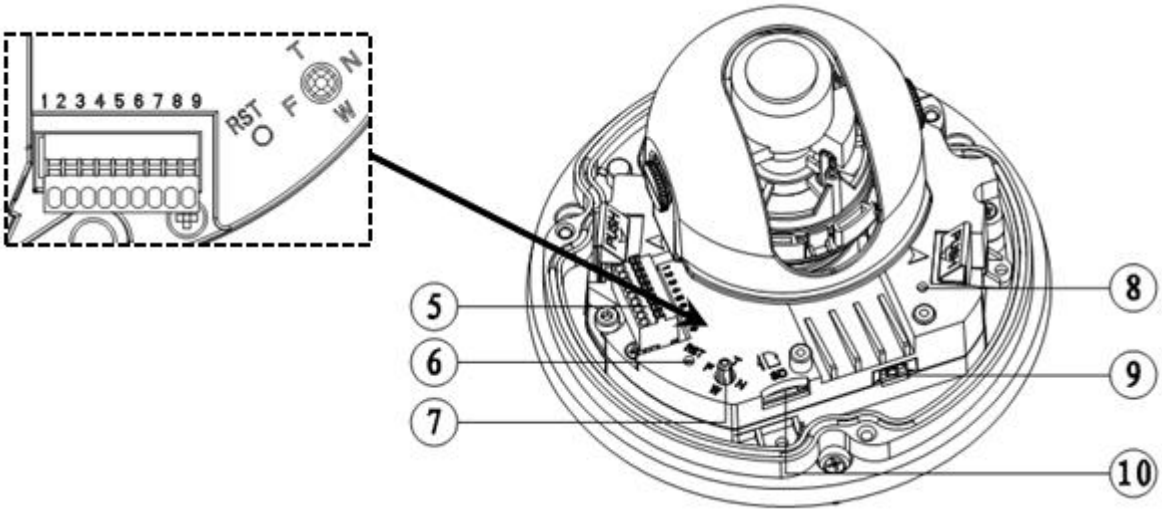

Figure 2-5 Camera internal without IR (2)

See Figure 2-6, Figure 2-7 and Figure 2-8.

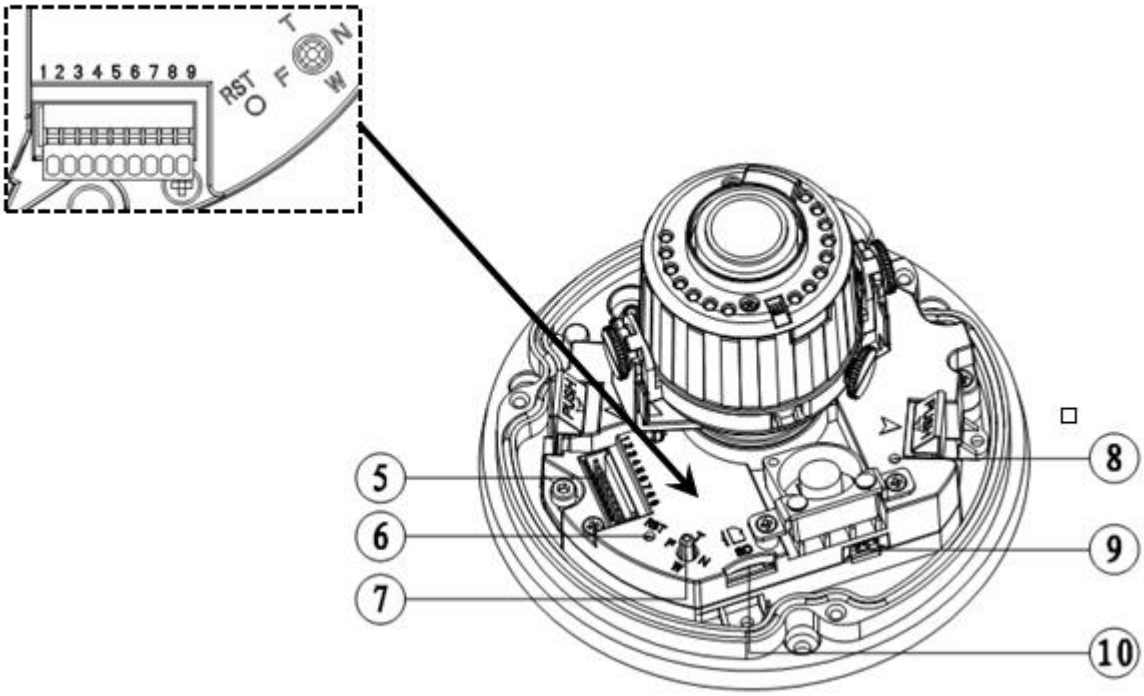

Figure 2-6 Motorized focus camera internal with IR (1-a)

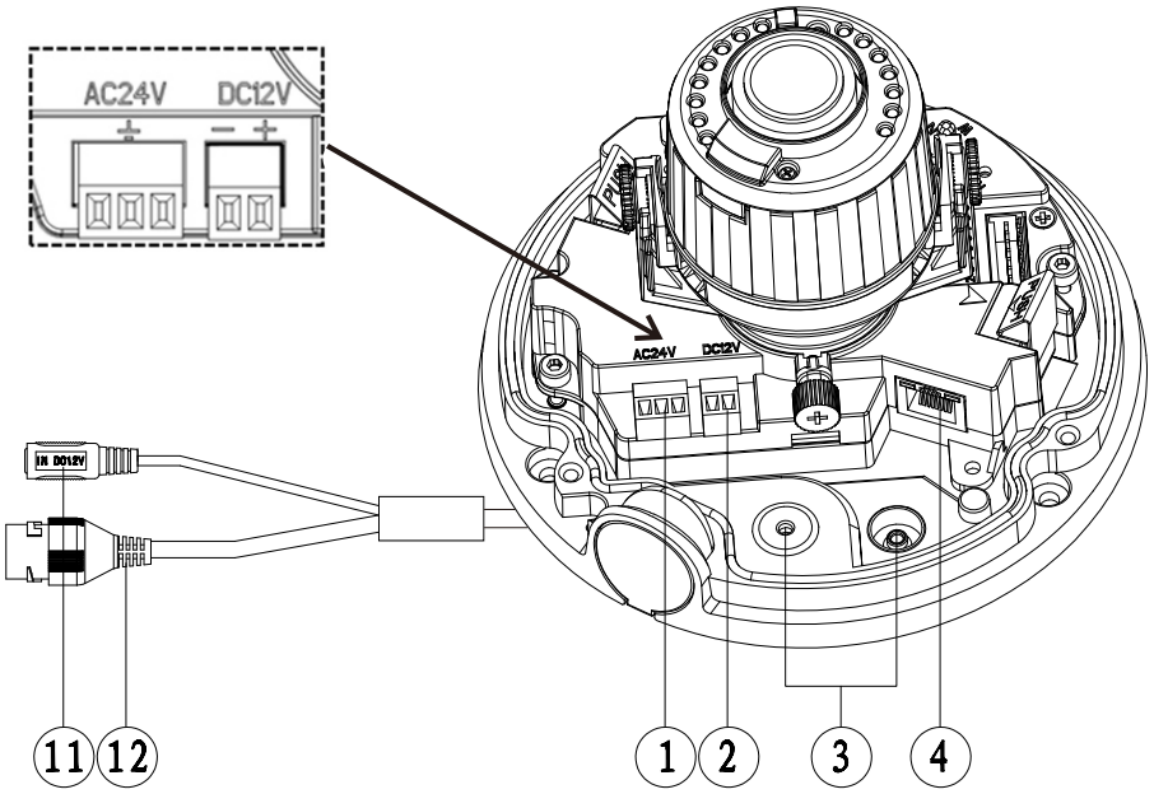

Figure 2-7 Motorized focus camera internal with IR (1-b)

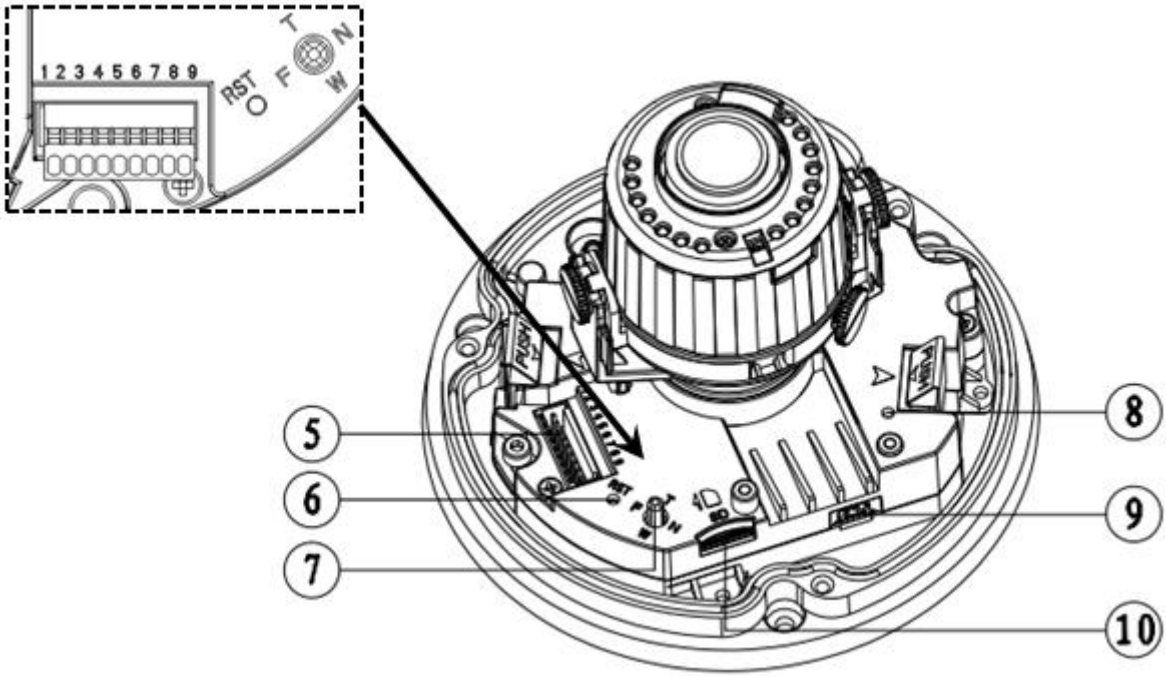

Figure 2-8 Motorized focus camera internal with IR (2)

See Figure 2-9, Figure 2-10 and Figure 2-11.

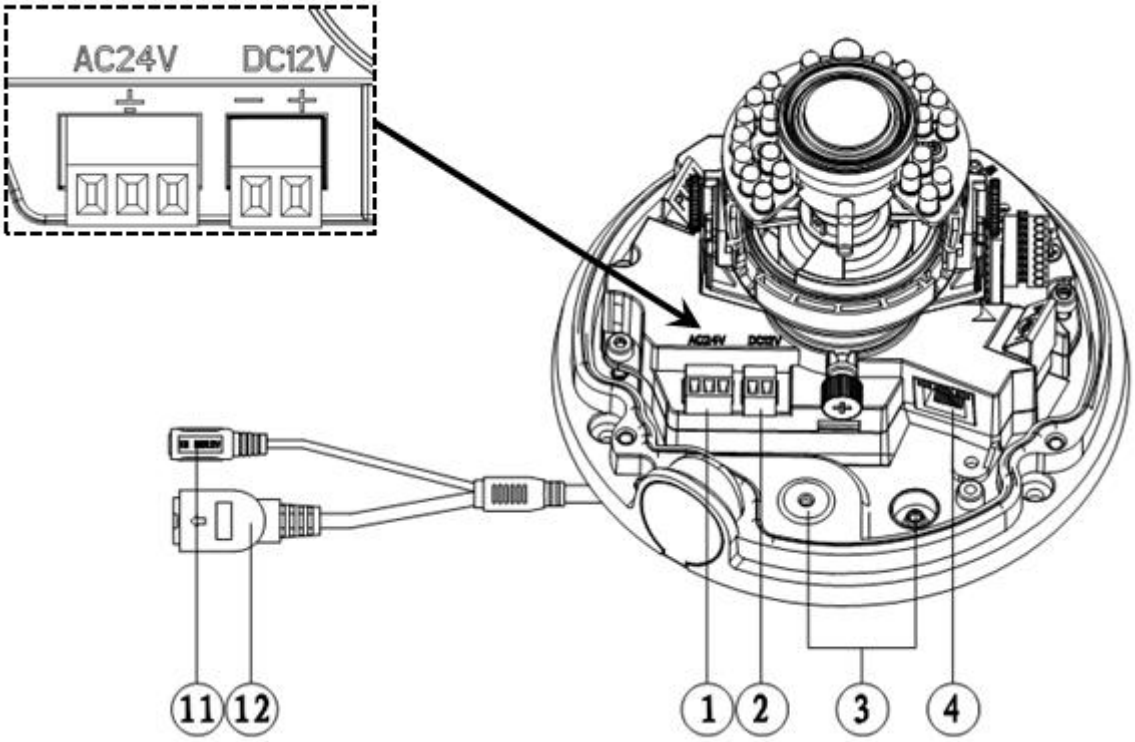

Figure 2-9 Manual focus camera internal with IR (1-a)

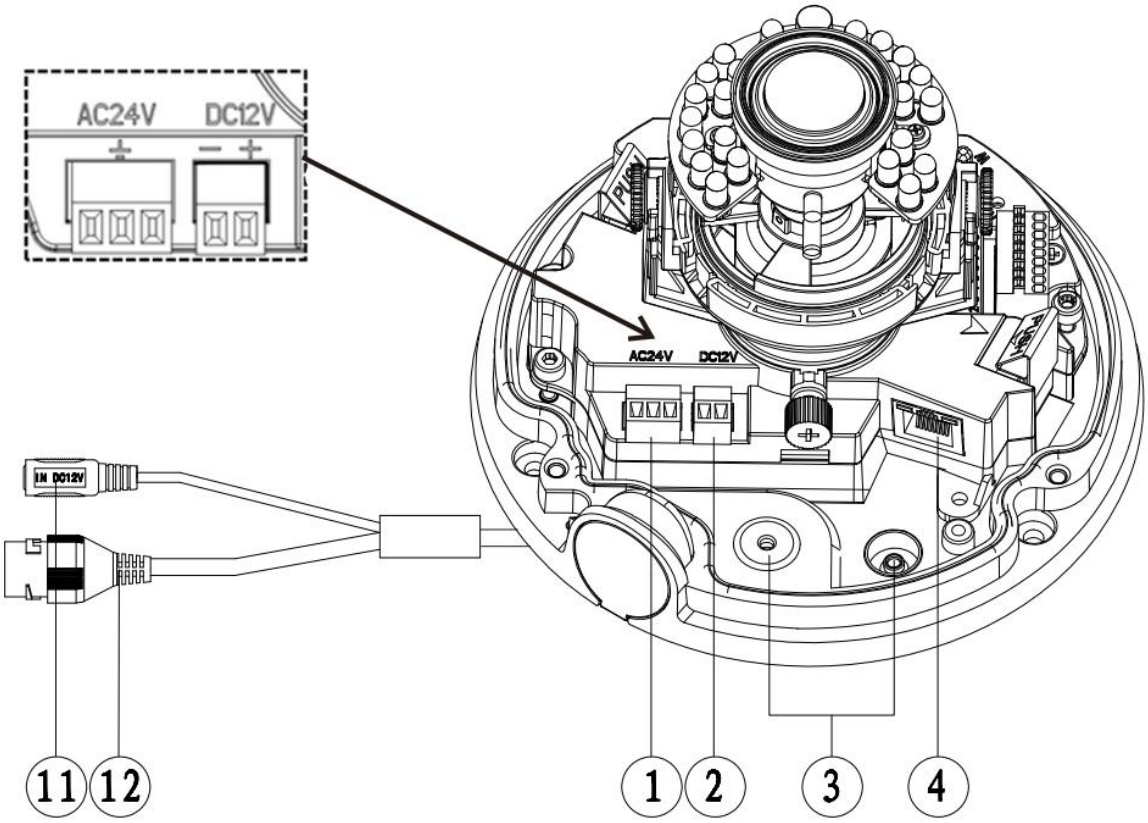

Figure 2-10 Manual focus camera internal with IR (1-b)

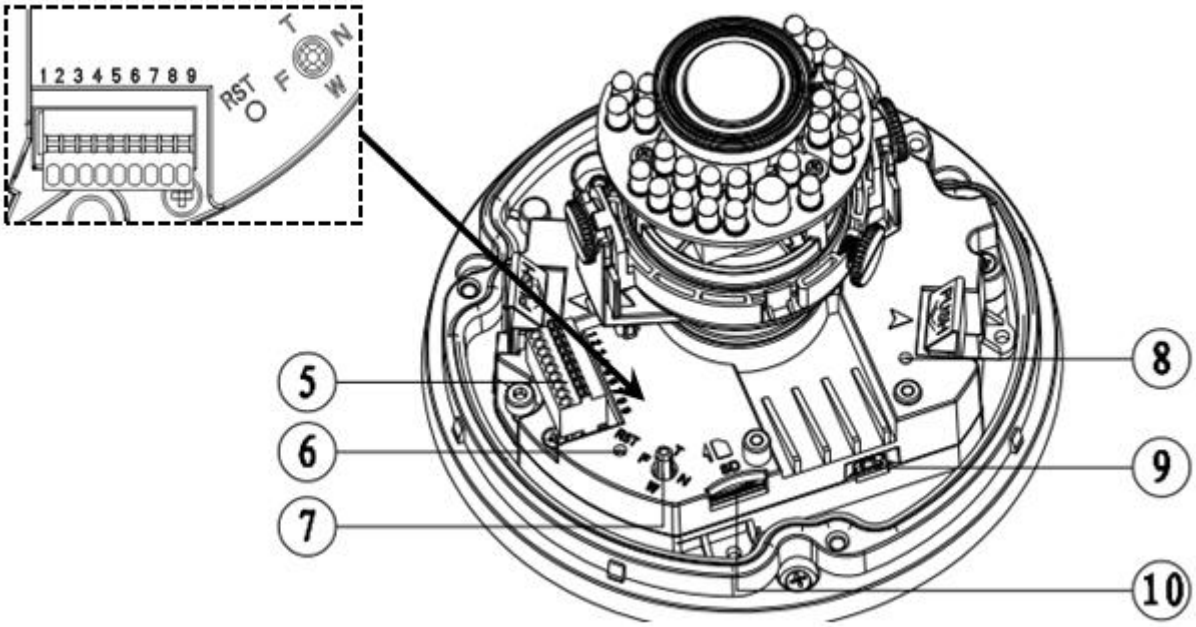

Figure 2-11 Manual focus camera internal with IR (2)

Please refer to the following sheet for external connection port definition information.

SN	Port	Port Name	Connector	Function Description
1	POWER	AC 24V power port	/	Connect to AC 24V power.
2	POWER	DC 12V power port	/	Connect to DC 12V power.
3	Cable exit of the external connected cable	/	/	Cable exit.
4	LAN	RJ45 network port	Ethernet port	Network cable port.
5	I/O	I/O port	/	It includes alarm input/output, audio and analog output.
6	RESET	Reset button	/	Reset button. It is to restore factory default setup.
7	AUTO FOCUS	5-direction button	/	Adjust lens angle of view and definition. Note: Only some models have this function.
8	Status indicator light	/	/	Display device running status.
9	Fan port	/	/	Connect to fan to reduce device internal problem. Please note this component is optional.
10	Micro SD	Micro SD card slot entry	Micro SD card	Connect to Micro SD card to realize local storage.
11	POWER	12V power port	/	The power port of the external connected cable.

				Default input is DC 12V.
12	LAN	Network port	Ethernet port	● The network port of the external connected cable. ● Connect to standard Ethernet port. ● Support PoE. Note: Before making crystal head, pull the anti-dust cover through network cable.

Please refer to the following sheet for I/O port cable function information. Note: actual product may vary.

Port Name	Cable SN	Cable Port Name	Function Description
I/O Port	1	ALARM_NO	Alarm output port. Output alarm signal to alarm device. NO: Normal open alarm output end.
	2	ALARM_COM	Alarm output public end.
	3	GND	Ground end.
	4	ALARM_IN	Alarm input port. It is to receive the on-off signal from the external alarm source.
	5	GND	Ground end.
	6	AUDIO_IN	Input audio signal. It is to receive the analog audio signal from the devices such as pickup.
	7	AUDIO_OUT	Output audio signal to devices such as sound box.
	8	GND	Ground end.
	9	VIDEO_OUT	Output analog video signal. It can connect to TV monitor to view video.

2.3 Bidirectional talk

2.3.1 Device-end to PC-end

Device Connection

Please connect the speaker or the MIC to the audio input port of the device. Then connect the earphone to the audio output port of the PC.

Login the Web and then click the Talk button to enable the bidirectional talk function.

You can see the button becomes orange after you enabled the bidirectional talk function.

Click Talk button again to stop the bidirectional talk function.

Listening Operation

At the device end, speak via the speaker or the pickup, and then you can get the audio from the earphone or sound box at the pc-end.

2.3.2 PC-end to the Device-end

Device Connection

Connect the speaker or the MIC to the audio input port of the PC and then connect the earphone to the audio output port of the device.

Login the Web and then click the Talk button to enable the bidirectional talk function.
You can see the button becomes orange after you enabled the audio talk function.
Click Talk button again to stop the bidirectional talk function.
Please note the on-site listening operation is null during the bidirectional talk process.

Listening Operation

At the PC-end, speak via the speaker or the pickup, and then you can get the audio from the earphone or sound box at the device-end.

2.4 Alarm Setup

The alarm interface is shown as in Figure 2-12. Please follow the steps listed below for local alarm input and output connection.
1) Connect the alarm input device to the alarm input port (No.4 pin) of the I/O cable.
2) Connect the alarm output device to the alarm output port (No.1 pin) and alarm output public port (No.2 pin). The alarm output port supports NO (normal open) alarm device only.
3) Open the Web, go to the Figure 2-12. Please set the alarm input 01 port for the first channel of the I/O cable (No.4 pin). Then you can select the corresponding type (NO/NC.)
4) Set the WEB alarm output. The alarm output 01 is for the alarm output port of the device. It is the No.1 pin of the I/O cable.

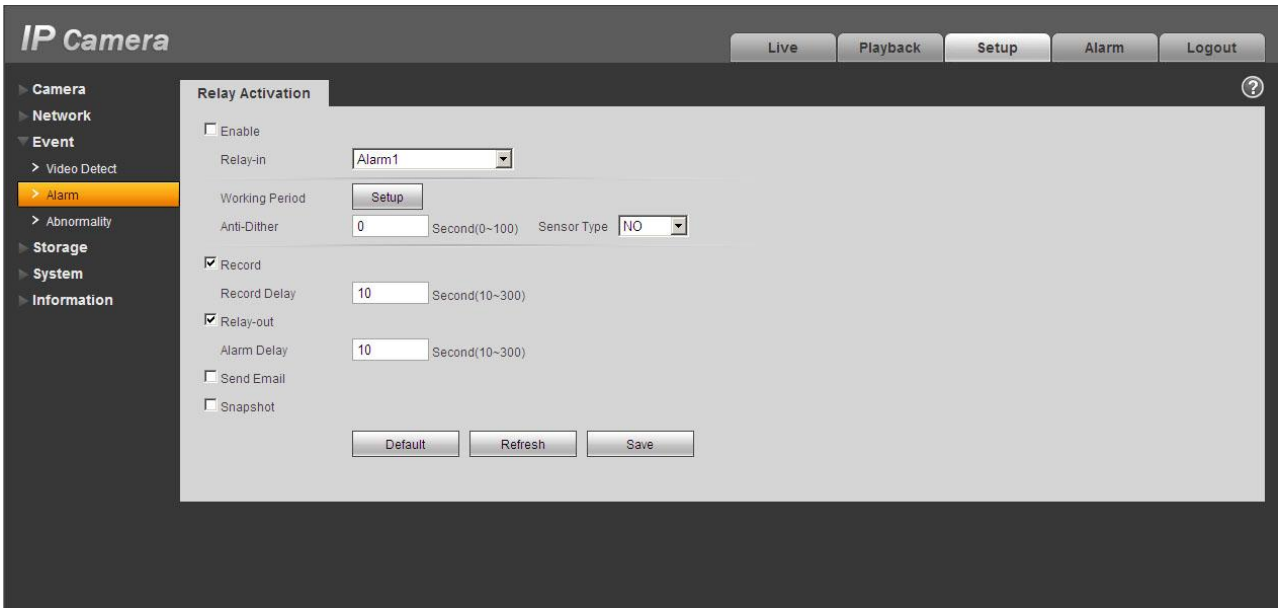

Figure 2-12 Alarm

Please refer to the following figure for alarm input information. See Figure 2-13.
Alarm input: When the input signal is idle or grounded, the device can collect the different statuses of the alarm input port. When the input signal is connected to the 5V or is idle, the device collects the logic “1”. When the input signal is grounded, the device collects the logic “0”.

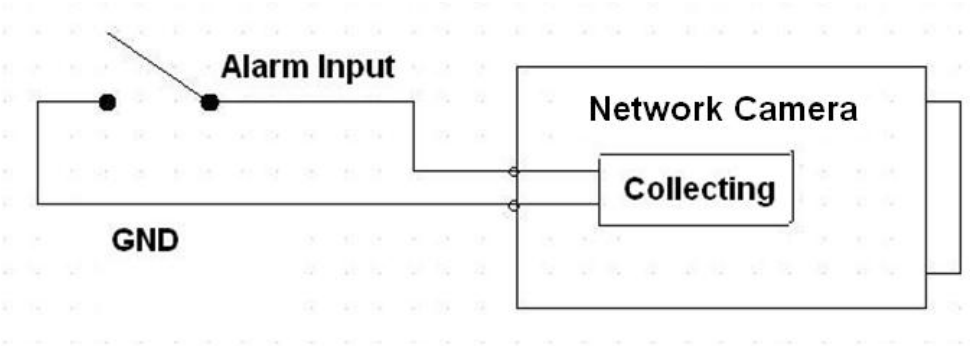

Figure 2-13 Alarm input

Please refer to the following figure for alarm output information. See Figure 2-14.
Port ALARM_COM and Port ALARM_NO composes an on-off button to provide the alarm output.
If the type is NO, this button is normal open. The button becomes on when there is an alarm output.
If the type is NC, this button is normal off. The button becomes off when there is an alarm output.

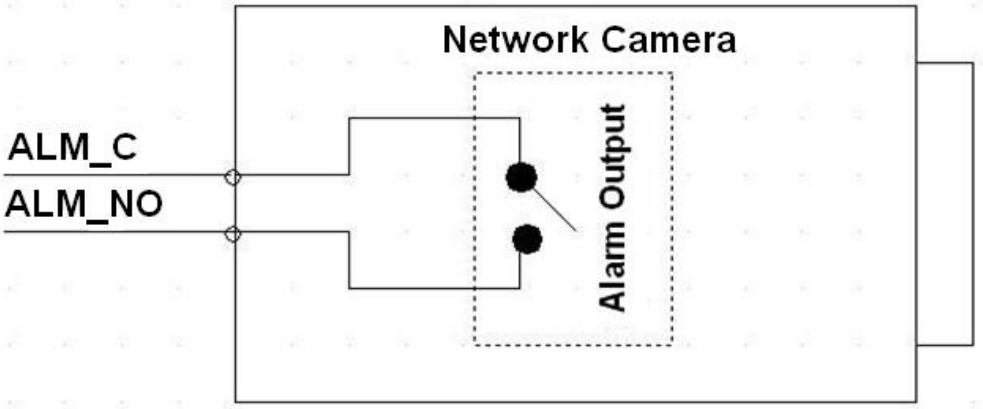

Figure 2-14 Alarm output

3 Installation

Important

- **Before you complete the installation and setup, do not remove the electrostatic attraction film on the transparent enclosure. Otherwise it may result in injury.**
- **After remove electrostatic attraction film, do not touch dome enclosure in case it may leave stain.**
- **Before the installation, please make sure the installation surface can sustain at least 3X weight of the bracket and the camera.**

3.1 Device Installation Introduction

Please refer to Figure 3-1 for device installation space information. You can use screws (diameter is less than 4.5mm) to secure the device. You can see there are installation position map and installation screws in the accessories bag for you to install the device conveniently.

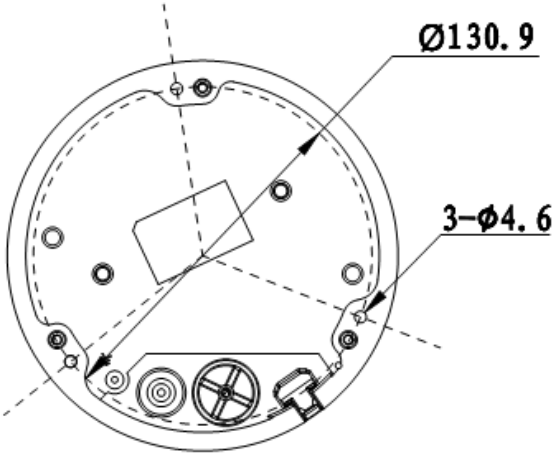

Figure 3-1 Installation 1

3.2 Device Installation Steps

3.2.1 General Installation

The general interface is shown as in Figure 3-2.

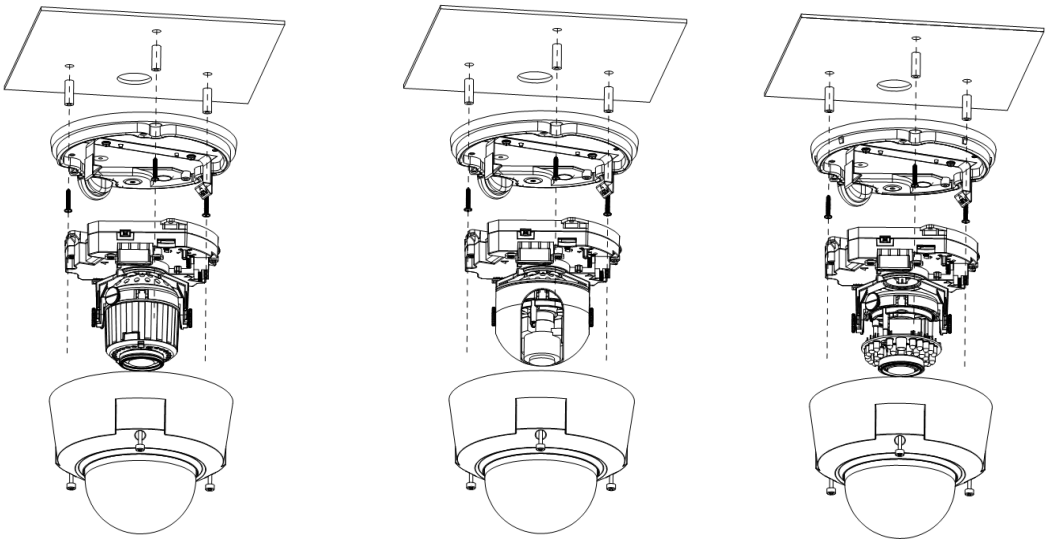

IR Motorized Zoom Lens Series Non-IR Series IR Manual Zoom Series

Figure 3-2 General installation

Step 1

Take the installation position map from the accessories bag and then paste it on the installation ceiling or the wall according to the monitor area. Please dig three bottom holes of the plastic expansion bolts according to the map. Take three expansion bolts from the accessories bag and then insert them to the holes you just dug and then fix firmly. If you need to dig a hole to pull through the cable, you need to dig a cable exit hole (The diameter is more than 28mm) on the installation surface according to the installation positioning map.

Step 2

Use the inner hex wrench from the accessories bag to unfasten the 3 hex screws on the dome camera enclosure to open it.

Step 3

Please remove the device cable (Provided) network port and the power terminal. Use the inner hex wrench (Provided) to remove the 2 inner hex screws from the dome driver module. Then please follow the prompt on the device to push the metal hook to two sides. Remove the dome driver module from the chassis. See Figure 3-3.

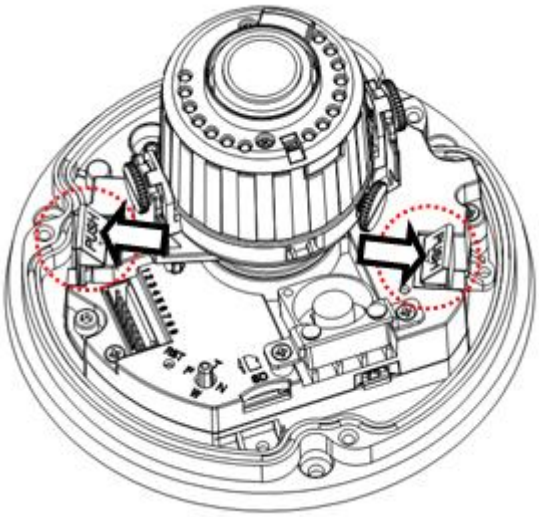

Figure 3-3 Installation 2

Step 4

Adjust the chassis of the device to the proper position and pull the cable to the cable exit of the installation surface. Line up the holes of the chassis to the three expansion bolt holes you dug in Step 1. Take three ST3.0 self-tapping screws and secure them in the three plastic expansion bolts. Now the chassis is secure on the installation surface.

Important

Please earth the device GND hole ⏚ (GND) to enhance the reliability of the device. The GND port is near the cable exit of the rear panel. The GND screw thread specification is M3-6mm.

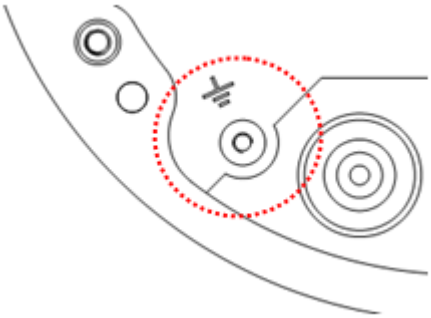

Figure 3-4 GND hole

Step 5

Please refer to the Step 3 to put the driver module back to the metal hooks of the chassis. Then use the inner hex wrench to secure the two inner hex screws to the chassis. Then connect the network cable and the power terminal.

Step 6

Adjust the lens to the proper angle according to your monitor requirements.

a) For the IR series product, you can skip current step and go the step b) directly. For the non-IR series product, push the port slightly to remove the decoration enclosure from the black plastic enclosure. See Figure 3-5.

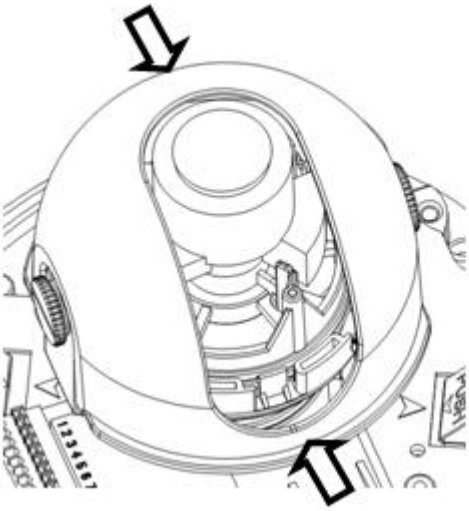

Figure 3-5 Installation 3

b) Lens pan rotation angle setup. Please refer to Figure 3-6 to unfasten the lock screw A and adjust the pan monitor angle to the proper position. Then fix the lock screw A. The pan angle ranges from 0°~+350°.

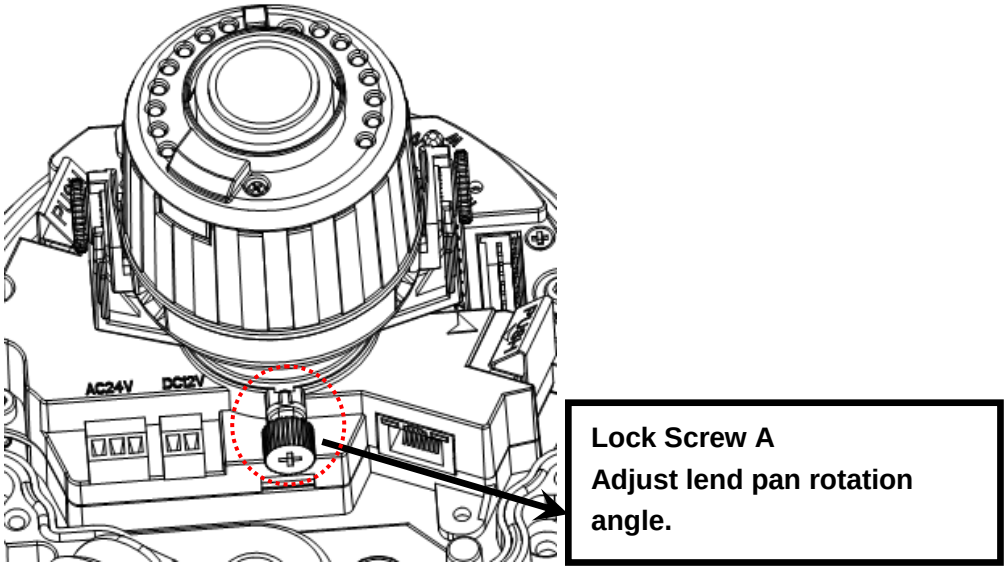

Figure 3-6 Installation 4

c). Lens tilt rotation angle. Please refer to Figure 3-7 to unfasten the lock screw B and lock screw C and adjust the tilt monitor angle to the proper position. Then fix the lock screw B and lock screw C. The tilt angle ranges from -23°~+73°.

d). Image pan rotation angle setup. Please refer to Figure 3-7 to turn lock screw D to adjust the video pan angle. Then fix the lock screw B and C. The video pan angle ranges from 0°~+350°.

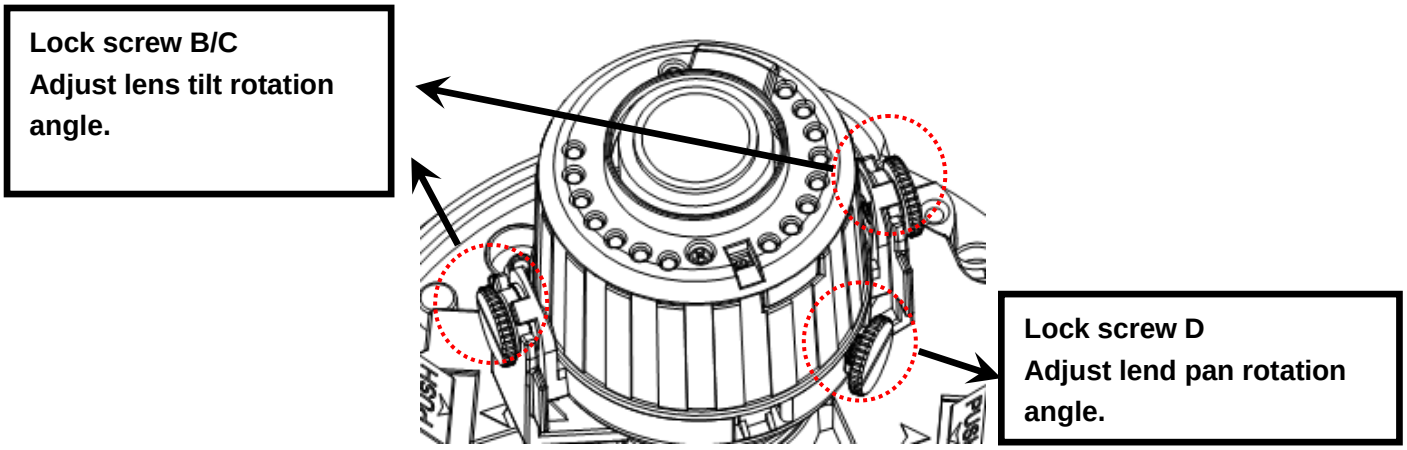

Figure 3-7 Installation 5

e) For the motorized zoom series product, please skip current step. Please refer to chapter 3.2.2 for the lens zoom and focus operation of the manual focus series product.

f) For the IR series product, please skip current step and complete the angle setup directly. For the non-IR series product, please put back the black plastic decoration enclosure to complete the angle setup.

Important

Please note Figure 3-6 and Figure 3-7 is based on the IR motorized zoom camera. For the IR manual zoom camera and non-IR series product, the lock screw position and the lens angle adjustment are the same.

Step 7

Line up the dome camera protection enclosure to the cable exit on the side panel. Put the enclosure back and then use the inner hex wrench to secure the 3 inner hex screws firmly. Now the installation is complete.

Note

Usually we recommend, after the installation, please take the three white static protection gaskets from the accessories bag and insert them to the screw holes of the protection enclosure. It is to enhance device reliability.

3.2.2 Manual Zoom Lens Focus Operation

The manual zoom lens focus interface is shown as in Figure 3-8.

Step 1

Slightly loosen the adjusting screw E and push the adjust screw E to make it swing. Adjust the lens focus to the proper position according to the displayed video.

Step 2

Slightly loosen the adjusting screw F and push the adjust screw F to make it swing. Adjust the lens to get the clear video and then fix the adjusting screw firmly.

Step 3

When you are securing the adjusting screw F, you can see the video may become blur. Please push the adjusting screw E to adjust the video slightly. Please secure the adjust screw E if you get a clear video.

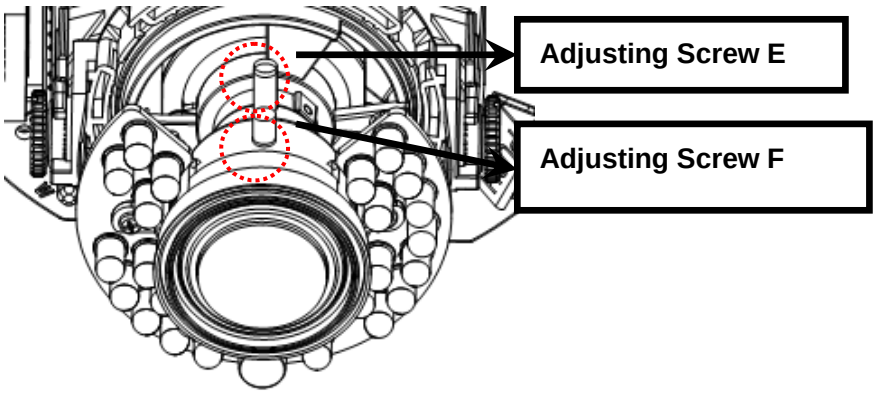

Figure 3-8 Installation 6

3.2.3 Side Cable Exit

If you adopt side cable exit when you are installing the device, you need to remove the plastic decoration plug from the side of the chassis. Use the proper tool to dig through the part specified in Figure 3-9 to form a cable exit. Put the plastic decoration plug back to the chassis and then pull the cable through the side panel of the chassis.

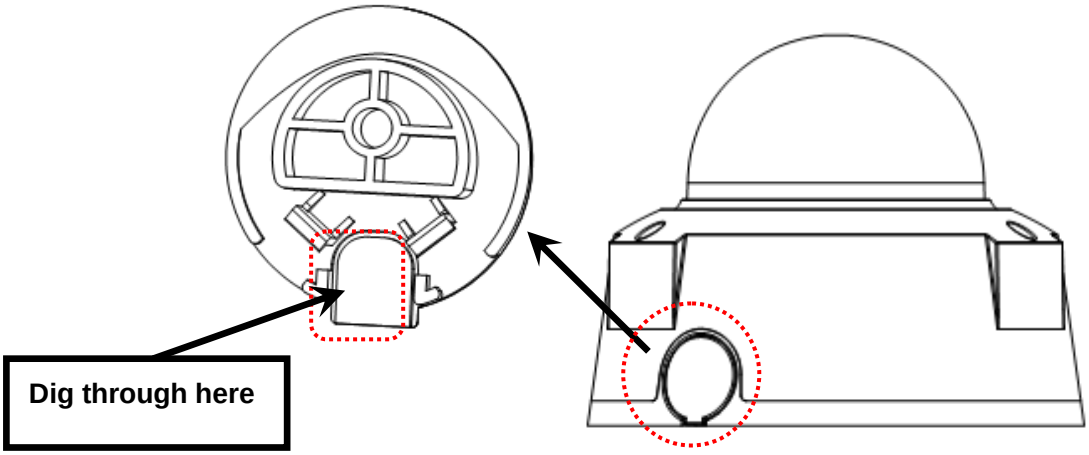

Figure 3-9 Installation 7

For some special user, he may need the metal protection tube to protect when he pulls through the cable from the side cable. There is PG11screw thread port when you pull through the cable from the side panel. Please remove the plastic decoration plug from the side panel of the chassis and pull through the cable to the tunnel of the PG11 screw thread. Now secure the tunnel in the PG11 screw threaded hole of the device.

3.2.4 Cable Connection

The device reserves two cable exits. The pin diameter shall be less than 15mm. One of the cable exits has M22 screw thread and can work with the default combination cable to remove the risk of the dragging and pulling of the cable.

The device has two waterproof airproof plugs (One default position is the cable exit of the chassis of the device and the other is in the accessories bag.). The waterproof airproof plug has two functions. One is to fill in the cable exit and pull through the cable. It supports the cable whose diameter ranges from 4.0~6.0. It is very convenient for you to do the waterproof work when you pull the cable through your own exit. Please refer to the steps listed.

Step 1

Take the waterproof airproof plug out, pull the cable (diameter ranges from 4.0 to 6.0) through the waterproof airproof plug. See Figure 3-10.

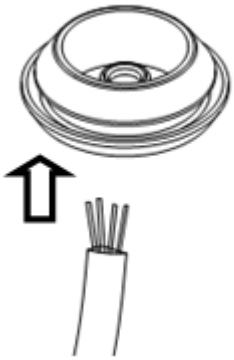

Figure 3-10 Cable connection

Step 2

Before you go to the Step 4 in the chapter 3.2.1 installation steps, please pull through cable with the waterproof airproof plug to the device chassis via the installation hole at the bottom of the chassis and then connect the cable pins.

Step 3

Refer to Step 4 and Step 5 in the chapter 3.2.1 installation steps to install and connect the cable pin to the device and then follow the proper steps to go on the installation.

Important

This series product has the power connection pin and I/O connection pin for you to pull through the signal cable.

3.3 Micro SD Card Installation

Warning!

Please unplug the device power cable and then shutdown the device before you install the Micro SD card.

Step 1

Please refer to Step2 in chapter 3.2.1 installation steps to open the device protection enclosure.

Step 2

Please find the “Micro SD” mark inside the device and adjust the Micro SD card direction according to prompt direction. Insert the card to the slot and then install the Micro SD card. See Figure 3-11.

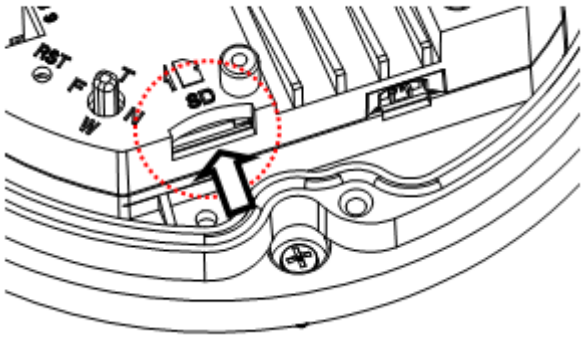

Figure 3-11 Micro SD card

Step 3

Please refer to Step 7 in chapter 3.2.1 to put the device protection enclosure back.

4 Quick Configuration Tool

4.1 Overview

Quick configuration tool can search current IP address, modify IP address. At the same time, you can use it to upgrade the device.
Please note the tool only applies to the IP addresses in the same segment.

4.2 Operation

Double click the “ConfigTools.exe” icon, you can see an interface is shown as in Figure 4-1.
In the device list interface, you can view device IP address, port number, subnet mask, default gateway, MAC address and etc.

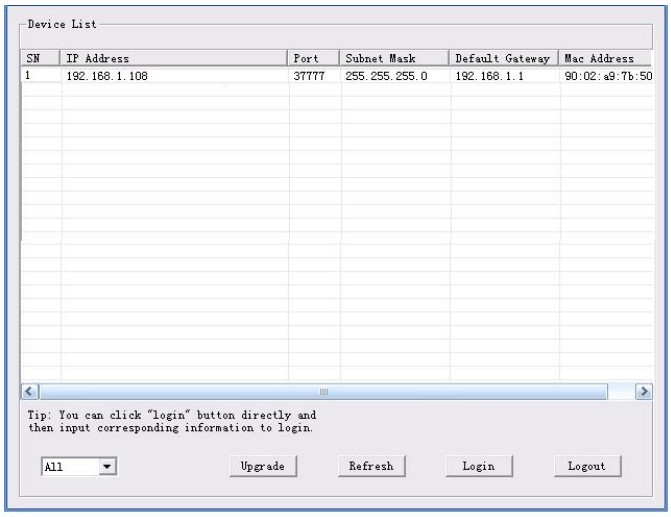

Figure 4-1 Search interface

Select one IP address and then right click mouse, you can see an interface is shown as in Figure 4-2.
Select the “Open Device Web” item; you can go to the corresponding web login interface.

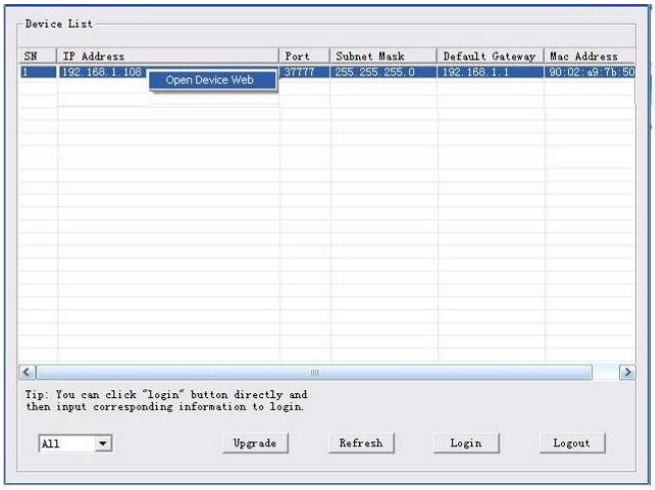

Figure 4-2 Search interface 2

If you want to modify the device IP address without logging in the device web interface, you can go to the configuration tool main interface to set.

In the configuration tool search interface (Figure 4-1), please select a device IP address and then double click it to open the login interface. Or you can select an IP address and then click the Login button to go to the login interface. See Figure 4-3.

In Figure 4-3, you can view device IP address, user name, password and port. Please modify the corresponding information to login.

Please note the port information here shall be identical with the port value you set in TCP port in Web Network interface. Otherwise, you cannot login the device.

If you are using device background upgrade port 3800 to login, other setups are all invalid.

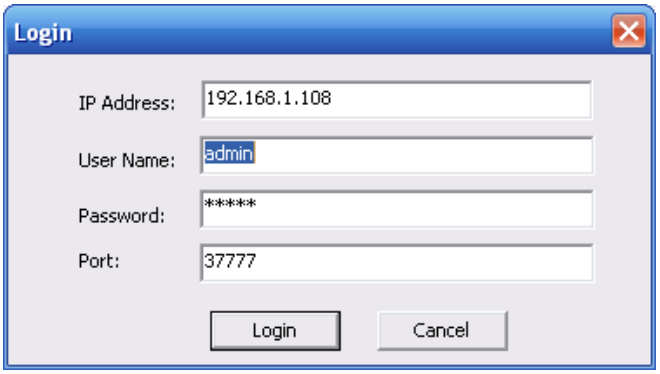

Figure 4-3 Login prompt

After you logged in, the configuration tool main interface is shown as below. See Figure 4-4.

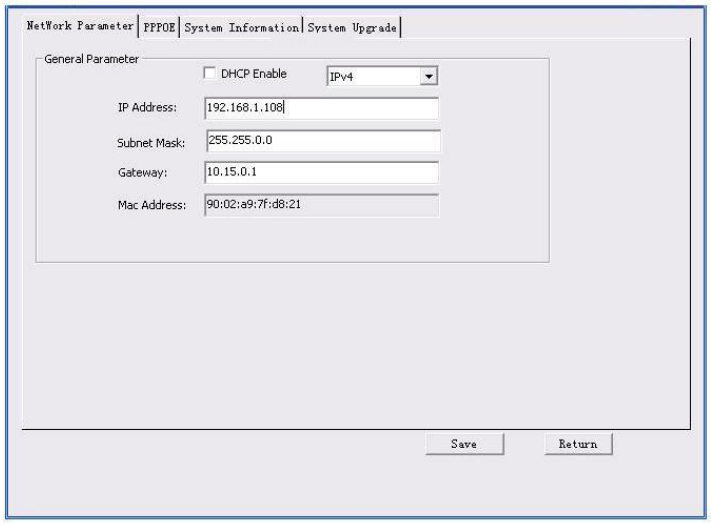

Figure 4-4 Main interface

For detailed information and operation instruction of the quick configuration tool, please refer to the *Quick Configuration Tool User's Manual* included in the resources CD.

5 Web Operation

This series network camera products support the Web access and management via PC.
Web includes several modules: Monitor channel preview, system configuration, alarm and etc.

5.1 Network Connection

Please follow the steps listed below for network connection.

- Make sure the network camera has connected to the network properly.
- Please set the IP address, subnet mask and gateway of the PC and the network camera respectively. Network camera default IP address is 192.168.1.108. Subnet mask is 255.255.255.0. Gateway is 192.168.1.1
- Use order ping ***.***.***.***(* network camera address) to check connection is OK or not.

5.2 Login and Main Interface

Open IE and input network camera address in the address bar. See Figure 5- 1.

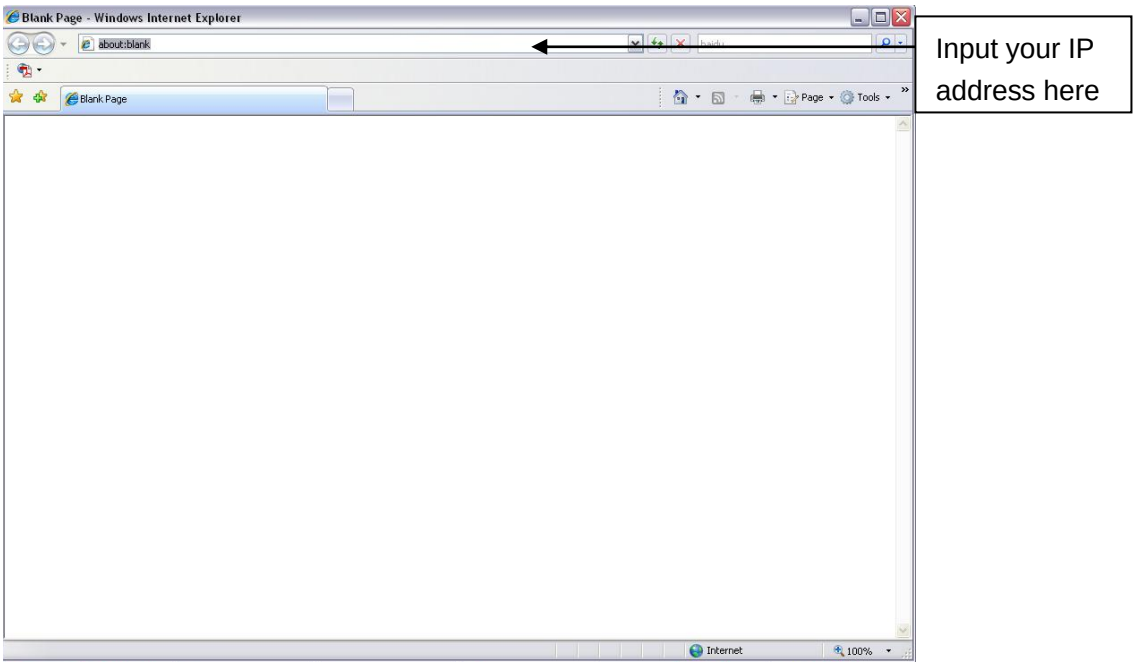

Figure 5- 1 IP address

The login interface is shown as below. See Figure 5- 2.
Please input your user name and password.
Default factory name is admin and password is admin.
Note: For security reasons, please modify your password after you first login.

Figure 5- 2 Web login

After you successfully logged in, please install WEB plug-in unit. Please refer to the Web Operation Manual included in the resource CD for detailed operation instruction.
See Figure 5- 3.

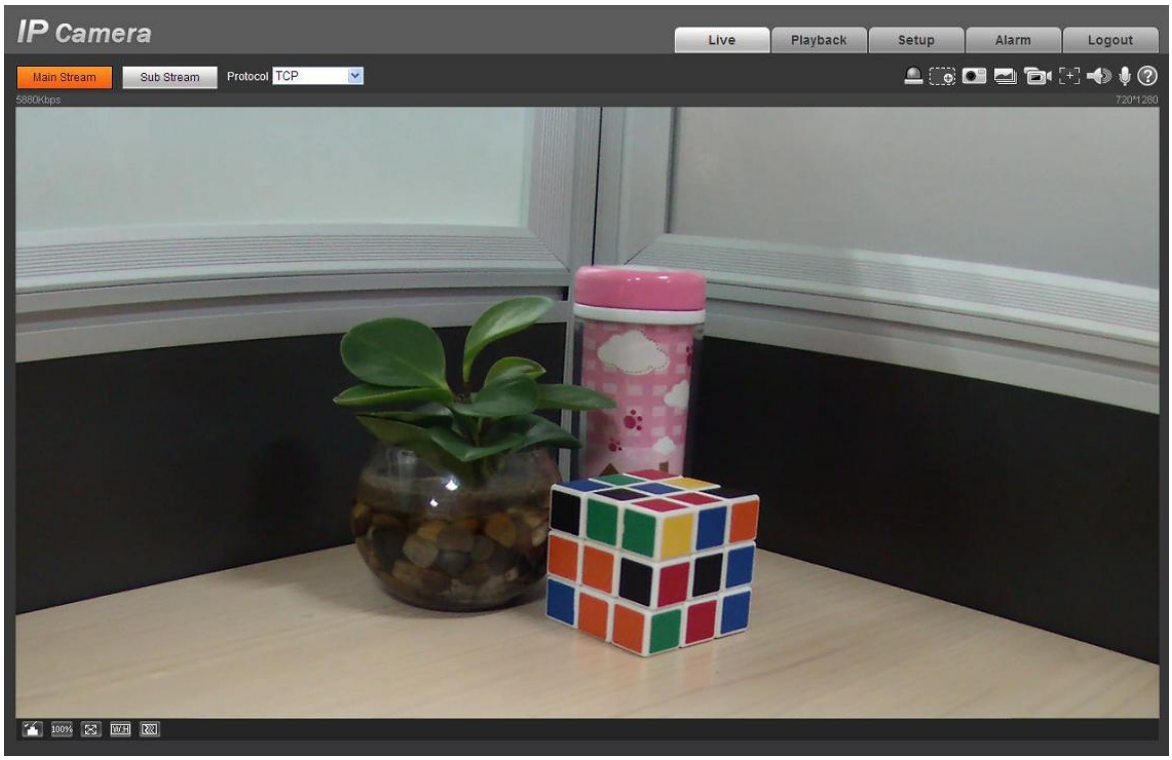

Figure 5- 3 Web monitoring window

6 FAQ

Bug	
I can not boot up the device.	Please click RESET button for at least five seconds to restore factory default setup.
Micro SD card write times	Do not set the Micro SD card as the storage media to storage the schedule record file. It may damage the Micro SD card duration.
I can not use the disk as the storage media.	When disk information is shown as hibernation or capacity is 0, please format it first (Via Web).
I can not upgrade the device via network.	When network upgrade operation failed, you can use port 3800 to continue upgrade.
Recommended Micro SD card brand	Kingston 4GB, Kingston 1GB, Kingston 16GB, Transcend 16GB，SanDisk 1G, SanDisk 4G. Usually we recommend the 4GB (or higher) or industry-level high speed card in case the slow speed results in data loss.
Audio function	Please use active device for the audio monitor input, otherwise there is no audio in the client-end.
The lightproof ring of the IR device	The lightproof ring of the IR device lens is the necessary component when it works. You can not view the clear video when the IR light is on if you remove the lightproof ring.

Appendix Toxic or Hazardous Materials or Elements

Component Name	Toxic or Hazardous Materials or Elements					
	Pb	Hg	Cd	Cr VI	PBB	PBDE
Circuit Board Component	○	○	○	○	○	○
Device Case	○	○	○	○	○	○
Wire and Cable	○	○	○	○	○	○
Packing Components	○	○	○	○	○	○
Accessories	○	○	○	○	○	○

O: Indicates that the concentration of the hazardous substance in all homogeneous materials in the parts is below the relevant threshold of the SJ/T11363-2006 standard.

X: Indicates that the concentration of the hazardous substance of at least one of all homogeneous materials in the parts is above the relevant threshold of the SJ/T11363-2006 standard. During the environmental-friendly use period (EFUP) period, the toxic or hazardous substance or elements contained in products will not leak or mutate so that the use of these (substances or elements) will not result in any severe environmental pollution, any bodily injury or damage to any assets. The consumer is not authorized to process such kind of substances or elements, please return to the corresponding local authorities to process according to your local government statutes.

Note

- **This user's manual is for reference only. Slight difference may be found in user interface.**
- **All the designs and software here are subject to change without prior written notice.**
- **All trademarks and registered trademarks mentioned are the properties of their respective owners.**
- **If there is any uncertainty or controversy, please refer to the final explanation of us.**
- **Please visit our website for more information.**