HD IR Waterproof Network Dome Camera

User’s Manual

Version 4.3.0

Welcome

Thank you for purchasing our Network camera!
This user’s manual is designed to be a reference tool for your system.
Please read the following safeguard and warnings carefully before you use this series product!
Please keep this user’s manual well for future reference!

Important Safeguards and Warnings

1．Electrical safety

All installation and operation here should conform to your local electrical safety codes.
The power shall conform to the requirement in the SELV (Safety Extra Low Voltage) and the Limited power source is rated 12V DC or 24V AC in the IEC60950-1. (Refer to general introduction)
Please note: Do not connect two power supplying sources to the device at the same time; it may result in device damage!
We assume no liability or responsibility for all the fires or electrical shock caused by improper handling or installation.
We are not liable for any problems caused by unauthorized modification or attempted repair.

2．Transportation security

Heavy stress, violent vibration or water splash are not allowed during transportation, storage and installation.

3．Installation

Do not apply power to the camera before completing installation.
Please install the proper power cut-off device during the installation connection.
Always follow the instruction guide the manufacturer recommended.

4．Qualified engineers needed

All the examination and repair work should be done by the qualified service engineers.
We are not liable for any problems caused by unauthorized modifications or attempted repair.

5．Environment

This series network camera should be installed in a cool, dry place away from direct sunlight, inflammable, explosive substances and etc.
Please keep it away from the electromagnetic radiation object and environment.
Please make sure the CCD (CMOS) component is out of the radiation of the laser beam device. Otherwise it may result in CCD (CMOS) optical component damage.
Please keep the sound ventilation.
Do not allow the water and other liquid falling into the camera.
Thunder-proof device is recommended to be adopted to better prevent thunder.
The grounding studs of the product are recommended to be grounded to further enhance the reliability of the camera.

6. Daily Maintenance

Please shut down the device and then unplug the power cable before you begin daily maintenance work.

Do not touch the CCD (CMOS) optic component. You can use the blower to clean the dust on the lens surface.
Always use the dry soft cloth to clean the device. If there is too much dust, please use the water to dilute the mild detergent first and then use it to clean the device. Finally use the dry cloth to clean the device.
Please put the dustproof cap to protect the CCD (CMOS) component when you do not use the camera.
Dome enclosure is the optical component, do not touch the enclosure when you are installing the device or clean the enclosure when you are doing maintenance work. Please use professional optical clean method to clean the enclosure. Improper enclosure clean method (such as use cloth) may result in poor IR effect of camera with IR function.

7. Accessories

Be sure to use all the accessories recommended by manufacturer.
Before installation, please open the package and check all the components are included.
Contact your local retailer ASAP if something is broken in your package.

Accessory Name	Amount
Network Camera Unit	1
Quick Start Guide	1
Installation Accessories Bag	1
CD	1

Table of Contents

1 General Introduction 1

1.1 Overview 1

1.2 Features 1

1.3 Specifications 2

2 Structure 4

2.1 Components 4

2.2 Framework and Dimension 4

3 Device Installation 6

3.1 Installation Steps 6

3.2 Restore Factory Default Setup Introduction 8

4 Quick Configuration Tool 9

4.1 Overview 9

4.2 Operation 9

5 Web Operation 11

5.1 Network Connection 11

5.2 Login and Main Interface 11

6 FAQ 13

Appendix Toxic or Hazardous Materials or Elements 14

1 General Introduction

1.1 Overview

This series network camera integrates the traditional camera and network video technology. It adopts video data collection, transmission together. It can connect to the network directly without any auxiliary device.

This series network camera uses standard H.264 video compression technology, which maximally guarantees the video quality.

It supports the IR night vision function. In the night environments, the device can use the IR light to highlight the object which is suitable for the surveillance function in the low illumination environments. The waterproof design conforms to the IP 66 level. It has the sound waterproof function suitable for use in the outdoor environments.

It can be used alone or used in a network area. When it is used lonely, you can connect it to the network and then use a network client-end. Due to its multiple functions and various uses, this series network camera is widely used in many environments such office, bank, road monitor and etc.

1.2 Features

User Management	● Different user rights for each group, one user belongs to one group. ● The user right shall not exceed the group right.
Storage Function	● Support central server backup function in accordance with your configuration and setup in alarm or schedule setting ● Support record via Web and the recorded file are storage in the client-end PC. ● Support network storage function such as FTP.
Network Monitor	● Network camera supports one-channel video data transmit to network terminal and then decode. Delaying time is within 270ms (network bandwidth support needed) ● Max supports 20 connections. ● Adopt the following video transmission protocol: HTTP, TCP, UDP, MULTICAST, RTP/RTCP, RTSP and etc. ● Support web access.
Network Management	● Realize network camera configuration and management via Ethernet. ● Support device management via web or client-end.
Power	● External power adapter DC 12V. ● Support PoE. **Warning！** **Do not connect these two power supplying sources to the device at the same time; it may result in device damage!**
Assistant Function	● Log function ● Support system resource information and running status real-time display. ● Day/Night mode auto switch. ● Support picture parameter setup such as electronic shutter and gain setup. ● Support motion detect. ● Backlight compensation: screen auto split to realize backlight compensation to adjust the bright. ● Support video watermark function to avoid vicious video modification. ● Built-in IR light. Support IR night vision. ● The enclosure conforms to the IP 66 protection. Has the waterproof function.

1.3 Specifications

Please refer to the following sheet for network camera performance specification.

Parameter \ Model		ICIP D2000AIR
System	Main Processor	High performance DSP
	OS	Embedded LINUX
	System Resources	Support real-time network, local record, and remote operation at the same time.
	User Interface	Remote operation interface such as WEB, DSS, PSS
	System Status	Bit stream statistics, log, and software version.
Video Parameter	Image Sensor	1/2.8-inch CMOS
	Pixel	1920(H)*1080(V)
	Day/night	Support day/night mode switch
	Gain Control	Fixed/Auto
	White Balance	Manual/Auto
	BLC	On/Off
	Exposure Mode	Manual/Low noise/Low motion blur/Auto It ranges from 1/3 to 1/10000
	Video Compression Standard	H.264/H.264H/MJPEG Note: Some versions do not support H.264H.
	Video Frame Rate	**PAL:** Main stream (1920*1080@25fps), extra stream (704*576@25fps)
		NTSC: Main stream (1920*1080@30fps), extra stream (704*480@30fps)
	Video Bit Rate	H.264: 56Kbps-8192Kbps MJPEG: adjustable and bit rate is adjustable. Support customized setup.
	Video Flip	Support mirror. Support flip function.
	Snapshot	Max 1f/s snapshot. File extension name is JPEG.
	Privacy Mask	Supports max 4 privacy mask zones
	Video Setup	Support parameter setup such as bright, contrast.
	Video Information	Channel title, time title, motion detect, camera masking.
	Lens	3.6mm, Fixed focus.
	Lens Interface	M12. Lens is the default accessories
Video	Motion Detect	396 (18*22) detection zones; sensitivity level ranges from 0 to 100; area threshold ranges from 0 to 100. Activation event: video storage, image snapshot, log, email function and etc.
Record	Record Priority	Manual >Video detect>Schedule
	Storage Management	Network storage

Network	**Wire Network**	1-ch 10/100 Base-T Ethernet
	Network Protocol	HTTP, TCP/IP, ARP,IGMP, ICMP, RTSP, RTP,UDP, RTCP, SMTP, FTP, DHCP, DNS, DDNS, PPPOE, UPNP, NTP, Bonjour, SNMP
	Remote Operation	Monitor, system setup, file download, log information, maintenance , upgrade and etc
	Restore Default Setup	Built-in Reset button
	IR light	IR light 10~ 20M.
General Parameter	**Power**	DC12V power and PoE. **Warning！** **Do not connect these two power supplying sources to the device at the same time; it may result in device damage!**
	Power Consumption	DC 12V 4W MAX
	Working Temperature	-30℃~+60℃
	Working Humidify	≤95%
	Dimensions(mm)	Φ113×86
	Weight	280g (Excluding box)
	Installation	Ceiling and wall mount

2 Structure

2.1 Components

You can refer to the following figure for multiple-function combination cable information. See Figure 2-1.

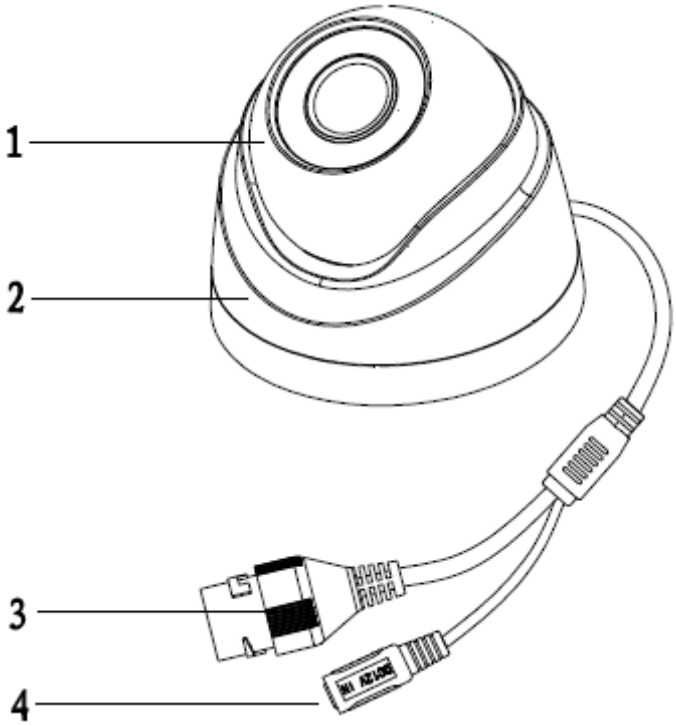

Figure 2-1 Multiple-function combination cable

Please refer to the following sheet for detailed information.

Component	Component Name
Component 1	Device lens
Component 2	Dome enclosure

No.	Port	Name	Connector	Note
3	LAN	Network port	Ethernet	To connect to standard Ethernet.
4	DC12V	DC 12V power		To connect to DC12V power supply.

2.2 Framework and Dimension

Please refer to the following two figures for dimension information. The unit is mm. See Figure 2-2 and Figure 2-3.

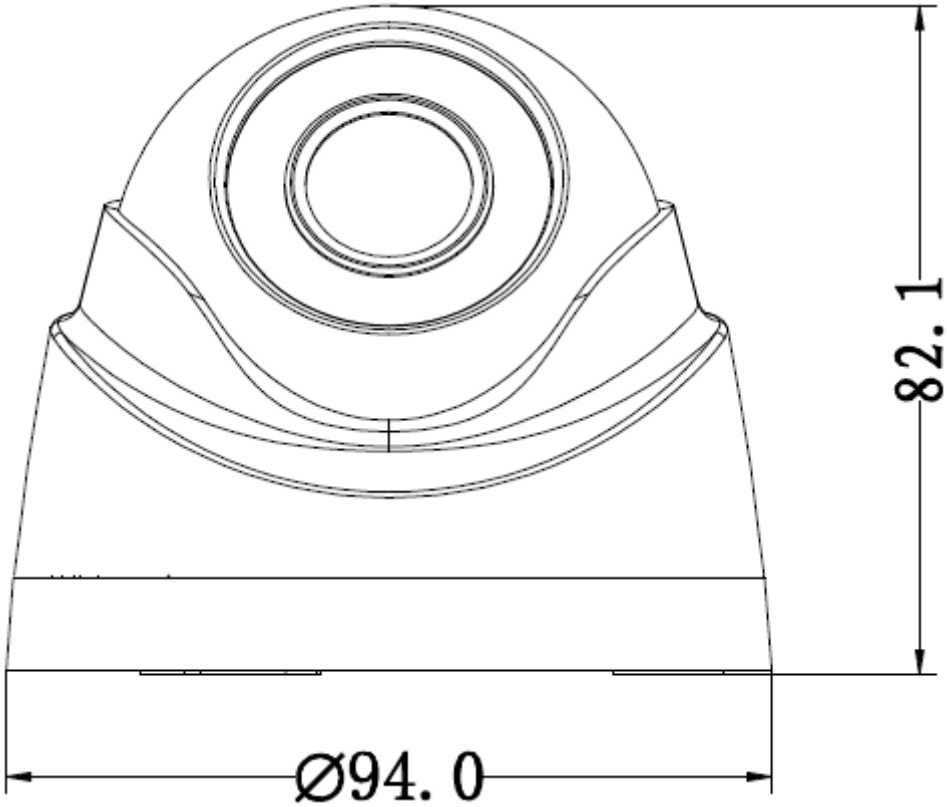

Figure 2-2 Dimension illustration 1

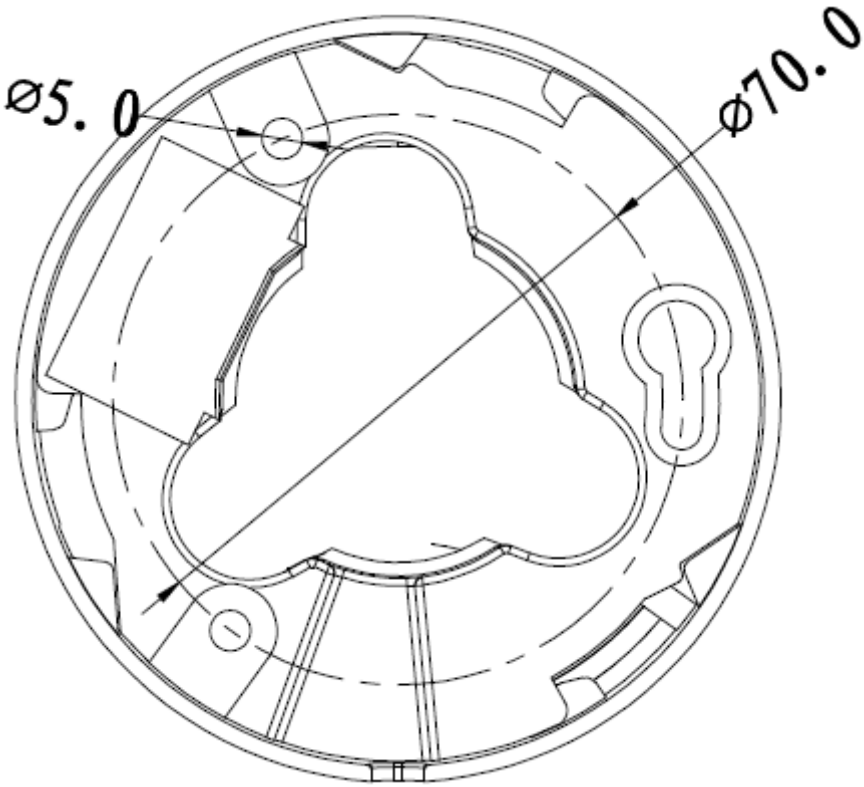

Figure 2-3 Dimension illustration 2

3 Device Installation

3.1 Installation Steps

Important

Before the installation, please make sure the installation environments can at least support 3x weight of the camera.

Please follow the steps listed below to install the device. Please refer to Figure 3-1 for reference.

Step 1

Turn clockwise to remove the decoration ring from the snap joints.

Step 2

Please take the installation position map in the accessories bag, and then paste it on the ceiling or the wall according to your monitor area requirements. Draw and then dig three plastic expansion bolts holes in the installation surface and then insert three expansion bolts in the holes. Secure these three bolts firmly. Please draw the cable out from the cable exit when you install the device.

Step 3

Adjust the device installation pedestal to the proper position and then line up the three screw holes in the device pedestal to the three plastic expansion bolt holes in the installation position. Put the three self-tapping screws in the three plastic expansion bolts firmly. Loosen the M3X8 cross recessed pan head slot screw of the pedestal to unfasten the preforming. (Do not remove, loosen a little bit will be OK.). Adjust the lens to the proper monitor angle and then use the original preforming to turn the M3X8 cross recessed pan head slot screw back.

Step4

Line up the three spigots of the decoration ring to the jags from the bottom to the top and then turn clockwise until you hear a clear sound ”KA”. Now the installation is complete.

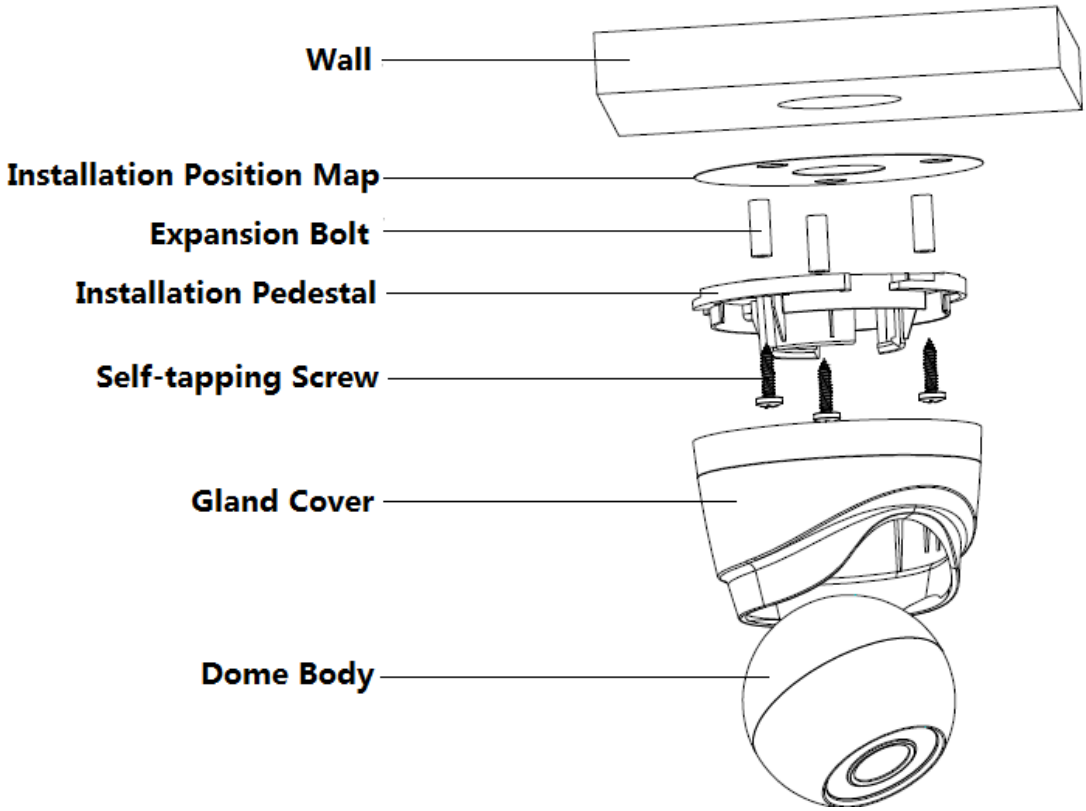

Figure 3-1 Device installation illustration 1

Important

Please pay attention to the dome camera direction when you are installing. Please refer to the following figure for detailed information. See Figure 3-2.

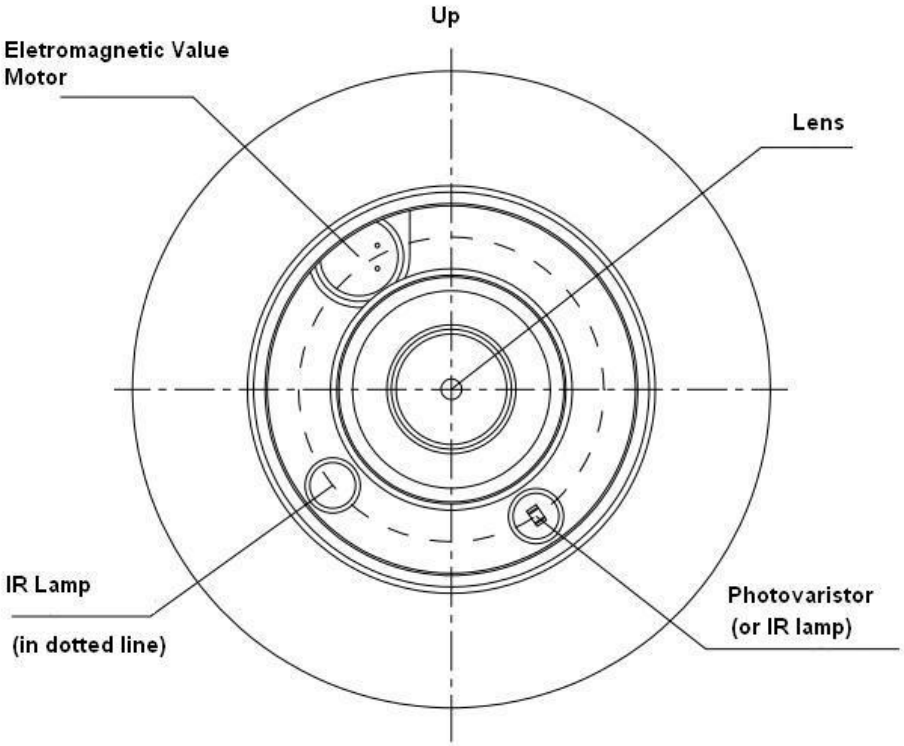

Figure 3-2 Device installation illustration 2

Note

This series product supports two cable exits. One is from the bottom and the other is from the side.

Please earth the GND port of the device to enhance the device reliability. The GND port is near the cable exit port on the rear of the dome. The GND screw uses the M2X5 pan screw.

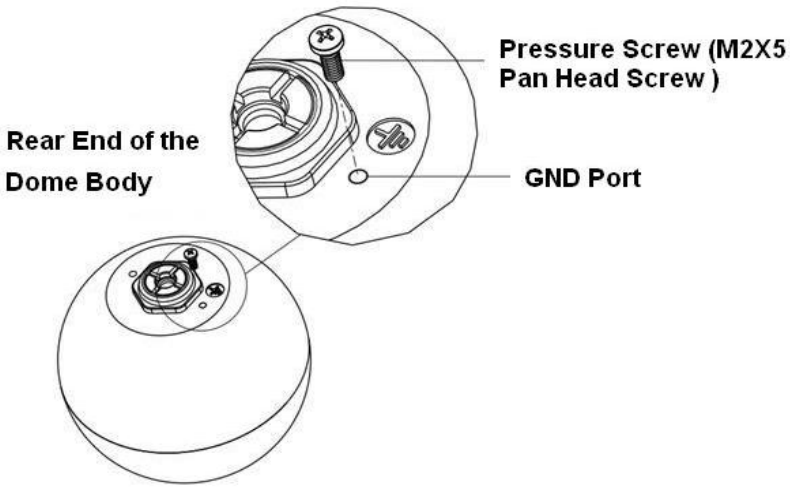

Figure 3-3 Device installation illustration 3

3.2 Restore Factory Default Setup Introduction

Important

Please use RESET button when device is running.

Step1

Please refer to step1 and step2 in chapter 3.1to loose the dome body. Push a little bit; you can take the dome body from the gland cover.

Step2

Take the dome body out and then turn the top cover hard to remove.

Step3

Slightly press the RESET button to complete the reset function. See Figure 3-4.

Step4

Turn the top cover back to the original position. Please make sure it reaches the original position, otherwise it may result in water leakage!

Step5

Put the dome back to the gland cover. Please refer to step4 in chapter 3.1 to install the decoration ring back.

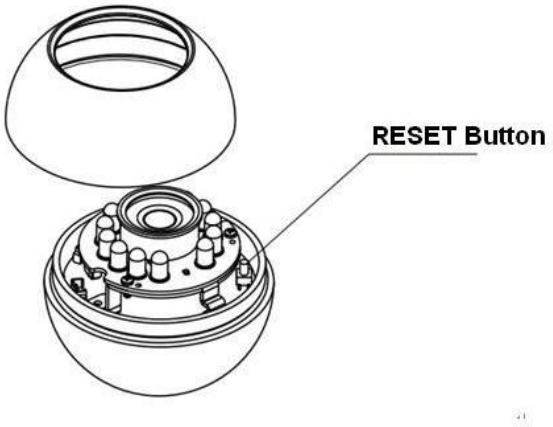

Figure 3-4 Reset

4 Quick Configuration Tool

4.1 Overview

Quick configuration tool can search current IP address, modify IP address. At the same time, you can use it to upgrade the device.
Please note the tool only applies to the IP addresses in the same segment.

4.2 Operation

Double click the “ConfigTools.exe” icon; you can see an interface is shown as in Figure 4-1.
In the device list interface, you can view device IP address, port number, subnet mask, default gateway, MAC address and etc.

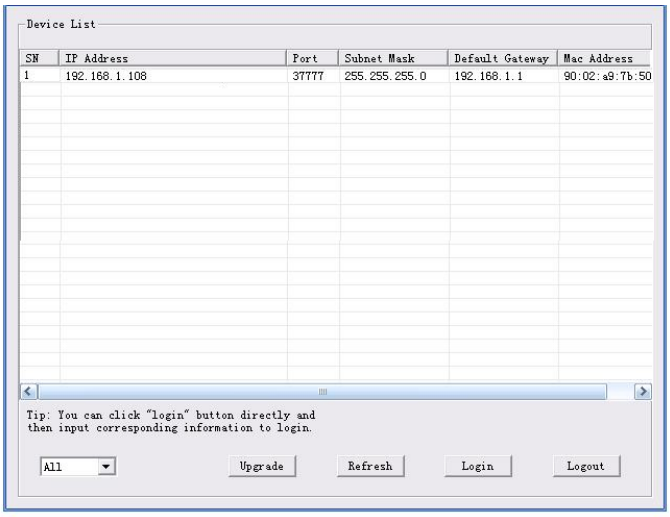

Figure 4-1 Search interface

Select one IP address and then right click mouse, you can see an interface is shown as in Figure 4-2.
Select the “Open Device Web” item; you can go to the corresponding web login interface.

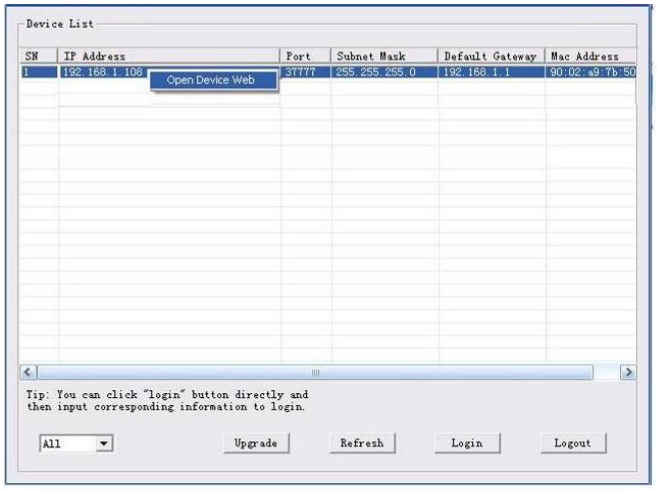

Figure 4-2 Search interface 2

If you want to modify the device IP address without logging in the device web interface, you can go to the configuration tool main interface to set.

In the configuration tool search interface (Figure 4-1), please select a device IP address and then double click it to open the login interface. Or you can select an IP address and then click the Login button to go to the login interface. See Figure 4-3.

In Figure 4-3, you can view device IP address, user name, password and port. Please modify the corresponding information to login.

Please note the port information here shall be identical with the port value you set in TCP port in Web Network interface. Otherwise, you cannot login the device.

If you are using device background upgrade port 3800 to login, other setups are all invalid.

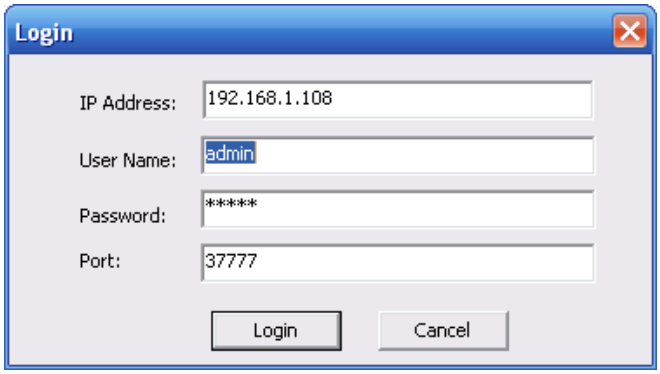

Figure 4-3 Login prompt

After you logged in, the configuration tool main interface is shown as below. See Figure 4-4.

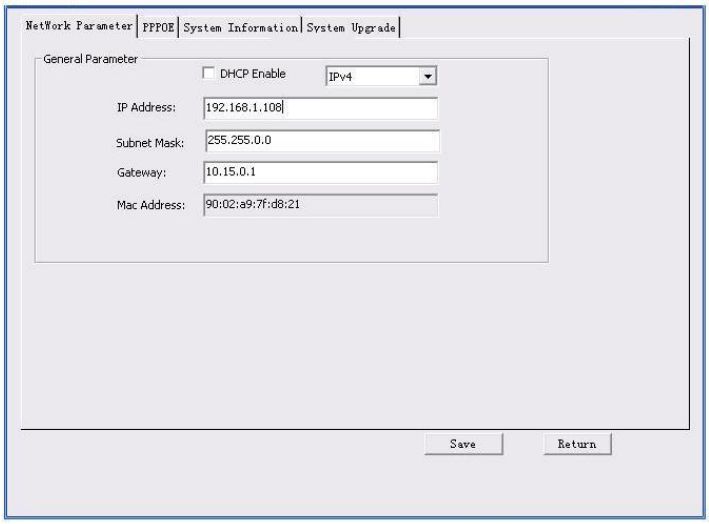

Figure 4-4 Main interface

For detailed information and operation instruction of the quick configuration tool, please refer to the *Quick Configuration Tool User's Manual* included in the resources CD.

5 Web Operation

This series network camera products support the Web access and management via PC.
Web includes several modules: Monitor channel preview, system configuration, alarm and etc.

5.1 Network Connection

Please follow the steps listed below for network connection.

- Make sure the network camera has connected to the network properly.
- Please set the IP address, subnet mask and gateway of the PC and the network camera respectively. Network camera default IP address is 192.168.1.108. Subnet mask is 255.255.255.0. Gateway is 192.168.1.1
- Use order ping ***.***.***.***(* network camera address) to check connection is OK or not.

5.2 Login and Main Interface

Open IE and input network camera address in the address bar. See Figure 5- 1.

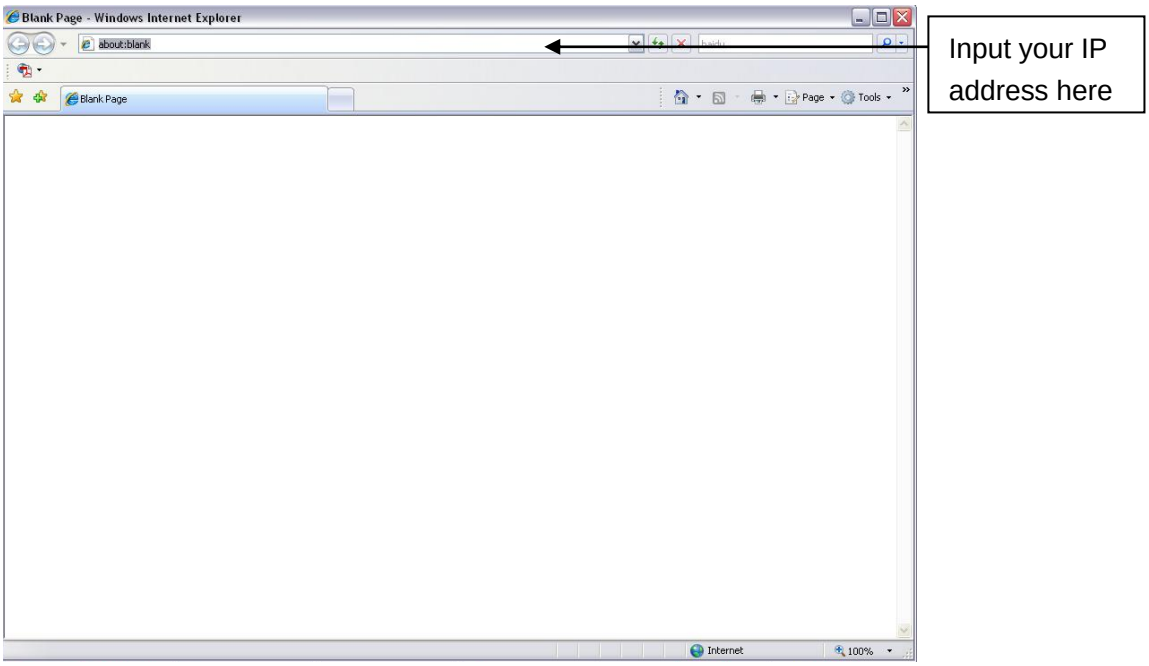

Figure 5- 1 IP address

The login interface is shown as below. See Figure 5- 2.
Please input your user name and password.
Default factory name is admin and password is admin.
Note: For security reasons, please modify your password after you first login.

Figure 5- 2 Web login

After you successfully logged in, please install WEB plug-in unit. Please refer to the Web Operation Manual included in the resource CD for detailed operation instruction.
See Figure 5- 3.

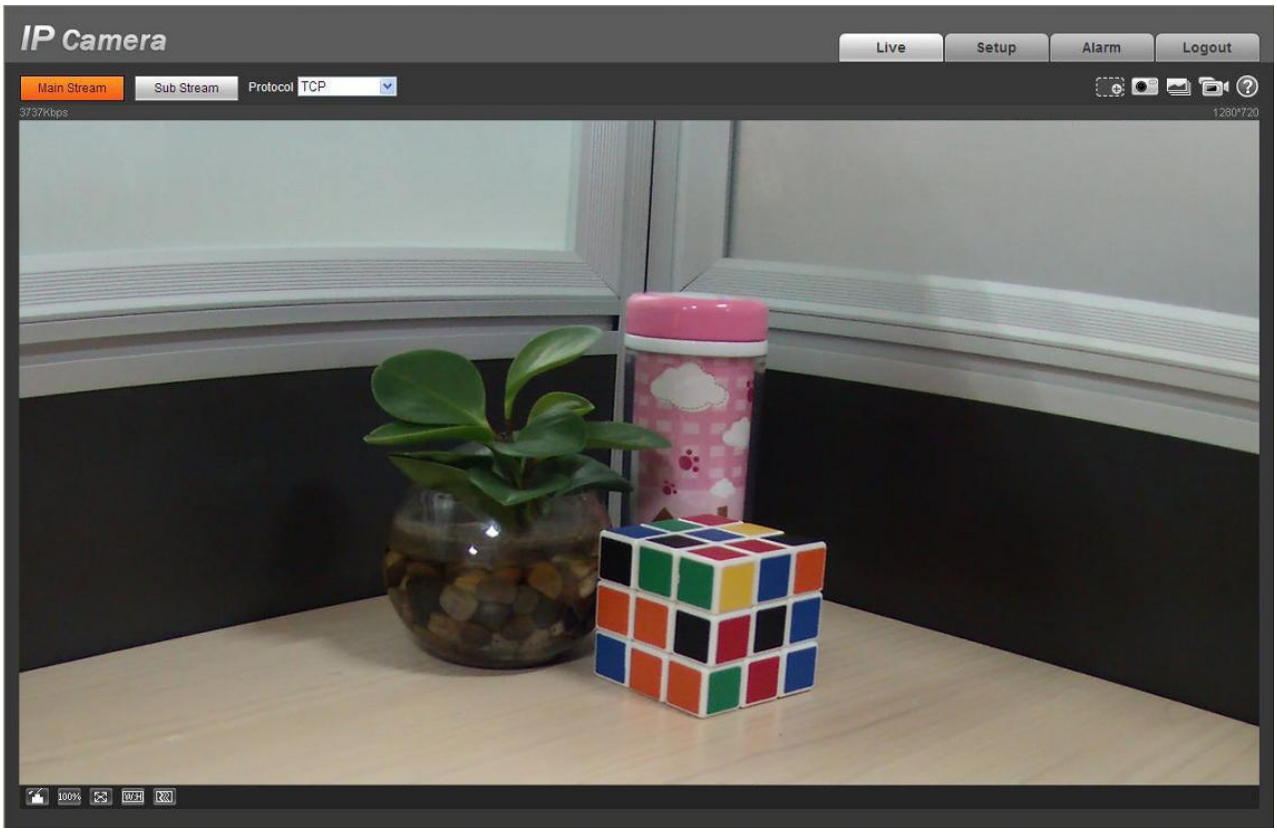

Figure 5- 3 Web monitoring window

6 FAQ

Bug	
I can not boot up the device or operate properly.	Please click RESET button for at least five seconds to restore factory default setup.
The water leakage occurred.	The unauthorized front or rear cap remove many result in water leakage. The glass front cap has sustained heavy push or strike. The waterproof plug of the rear cap becomes loosen.
IR video is poor.	Do not use the proper supplying power. The IR light can not turn on completely. The object is out of the IR distance range of current device. IR-CUT does not turn to the night mode. The photosensitive chip of the front-end can not sense the IR light.
I can not upgrade the device via network.	When network upgrade operation failed, you can use port 3800 to continue upgrade.
I can not login the client-end or the WEB.	For Windows OS 98 or Windows ME user, if you can not install the client-end or can not view after the installation. We recommend the win2000sp4 OS or install the client-end of the low version. The Active X control is blocked. The display card version shall be dx8.1 or higher. Network connection error occurred. Invalid network setup. Invalid user name or password.
I can not play the download file.	There is no player. There is no DX8.1 or higher. For the MEDIA PLAYER, there shall be Div X503Bundle.exe plugin if you play the .AVI file. For Windows XP user, you need to install the plugin DivX503Bundle.exe and ffdsho-2004 1012.exe.
To guarantee setup update	After you modified the important setup, please reboot the device via the software to make sure the setup has been updated to the storage medium.
Power adapter	The general power adapter can work ranging from 0℃ to 40 ℃. The device may result in unstable power supply when the temperature exceeds the working temperature. Please replace an industry-level power adapter if you are using in the harsh environments.

Appendix Toxic or Hazardous Materials or Elements

Component Name	Toxic or Hazardous Materials or Elements					
	Pb	Hg	Cd	Cr VI	PBB	PBDE
Circuit Board Component	○	○	○	○	○	○
Device Case	○	○	○	○	○	○
Wire and Cable	○	○	○	○	○	○
Packing Components	○	○	○	○	○	○
Accessories	○	○	○	○	○	○

O: Indicates that the concentration of the hazardous substance in all homogeneous materials in the parts is below the relevant threshold of the SJ/T11363-2006 standard.

X: Indicates that the concentration of the hazardous substance of at least one of all homogeneous materials in the parts is above the relevant threshold of the SJ/T11363-2006 standard. During the environmental-friendly use period (EFUP) period, the toxic or hazardous substance or elements contained in products will not leak or mutate so that the use of these (substances or elements) will not result in any severe environmental pollution, any bodily injury or damage to any assets. The consumer is not authorized to process such kind of substances or elements, please return to the corresponding local authorities to process according to your local government statutes.

Note

- **This user's manual is for reference only. Slight difference may be found in user interface.**
- **All the designs and software here are subject to change without prior written notice.**
- **All trademarks and registered trademarks mentioned are the properties of their respective owners.**
- **If there is any uncertainty or controversy, please refer to the final explanation of us.**
- **Please visit our website for more information.**