HD IR Vandal Proof Network Dome Camera

Quick Start Guide

Version 1.1.1

Welcome

Thank you for purchasing our Network camera!
This user's manual is designed to be a reference tool for your system.
Please read the following safeguard and warnings carefully before you use this series product!
Please keep this user's manual well for future reference!

Important Safeguards and Warnings

1．Electrical safety

All installation and operation here should conform to your local electrical safety codes.
Please check if the power supply is correct before operating the device.
The power shall conform to the requirement in the SELV (Safety Extra Low Voltage) and the Limited power source is rated 12V DC, DC5V or AC24V in the IEC60950-1. (Power supply requirement is subject to the device label).
Please install easy-to-use device for power off before installing wiring, which is for emergent power off when necessary.
Please prevent the line cord from being trampled or pressed, especially the plug, power socket and the junction from the device.
Note: Do not connect these two power supplying sources to the device at the same time; it may result in device damage!
We assume no liability or responsibility for all the fires or electrical shock caused by improper handling or installation.
We are not liable for any problems caused by unauthorized modification or attempted repair.

2．Environment

Please don't aim the device at strong light (such as lighting, sunlight and so on) to focus; otherwise it may cause overexposure (It is not the device malfunction), which will affect the longevity of CCD or CMOS.
Please transport, use and store the device within the range of allowed humidity and temperature.
Please don't keep the device in a place which is wet, dusty, extremely hot, and extremely cold and with strong electromagnetic radiation or unstable lighting.
Please do not allow water and other liquid falling into the camera in case that the internal components are damaged.
Please do not allow rain or damp to the indoor device in case fire or lightning may occur.
Please keep the sound ventilation in case of heat accumulation.
Please pack the device with standard factory packaging or material with same quality when transporting the device.
Heavy stress, violent vibration or water splash are not allowed during transportation, storage and installation.

3. Operation and Daily Maintenance

Please do not touch the heat dissipation component of the device directly in order to avoid scald.
Please do not dismantle the device; there is no component which can be fixed by users themselves in the machine. It may cause water leakage or bad image for the device due to unprofessional dismantling.
It is recommended to use the device with thunder proof device in order to improve thunder proof effect.
The grounding holes of the product are recommended to be grounded to further enhance the reliability of the camera.
Do not touch the CCD (CMOS) optic component directly. You can use the blower to clean the dust or dirt on the lens surface. Please use a dry cloth wetted by alcohol to wipe away the dust gently if it is necessary to clean.
Always use the dry soft cloth to clean the device. If there is too much dust, please use the water to dilute the mild detergent first and then use it to clean the device. Finally use the dry cloth to clean the device. Don't use volatile solvent like alcohol, benzene, thinner and etc or strong detergent with abrasiveness, otherwise it will damage the surface coating or reduce the working performance of the device.
Dome cover is an optical device, please don't touch or wipe cover surface directly during installation and use, please refer to the following methods to deal with once dirt is found:

Stained with dirt

Use oil-free soft brush or hair dries to remove it gently.

Stained with grease or fingerprint

Use soft cloth to wipe the water drop or oil gently to make it dry, then use oil-free cotton cloth or paper soaked with alcohol or detergent to wipe from the lens center to outward. It is ok to change the cloth and wipe several times if it is not clean enough.

Warning

Please use the standard accessories provided by manufacturer and make sure the device is installed and fixed by professional engineers.

Please prevent the device surface from the radiation of laser beam when using laser beam device.

Please do not provide two or more power supply modes for the device, otherwise it may cause damage to the device.

Statement

Please refer to the actual product for more details; the manual is just for reference.
The manual will be regularly upgraded according to the product update; the upgraded content will be added in the manual without prior announcement.
Please contact the supplier or customer service if there is any problem occurred when using the device.
Please contact the customer service for the latest procedure and supplementary documentation.
There may be deviation between the actual value of some data and the value provided in the manual due to the reasons such as the real environment is not stable and so on. Please refer to the company's final explanation if there is any doubt or dispute.
The company is not liable for any loss caused by the operation which is not followed by the manual.

Note:

Please refer to the disk for more details, check and download corresponding user's manual and tool.
Before installation, please open the package and check all the components are included.
Contact your local retailer ASAP if something is broken in your package.

Accessory Name	Amount
Network Camera Unit	1
Quick Start Guide	1
Installation Accessories Bag	1
CD	1

Table of Contents

1 Device Structure 1

1.1 Structure Components 1

1.2 Framework and Dimension 1

1.3 Alarm Setup 2

2 Device Installation 5

2.1 Installation Steps 5

2.2 Micro SD Card Installation 7

3 Network Configuration 9

3.1 Modify IP Address 9

3.2 Login WEB Interface 10

1 Device Structure

1.1 Structure Components

Note:

The following figure is for reference only, which is used to know the components and cable port function.

There are differences about structure components and cables between different models, please refer to the actual object for more details.

You can refer to the following figure for component structure. See Figure 1-1.

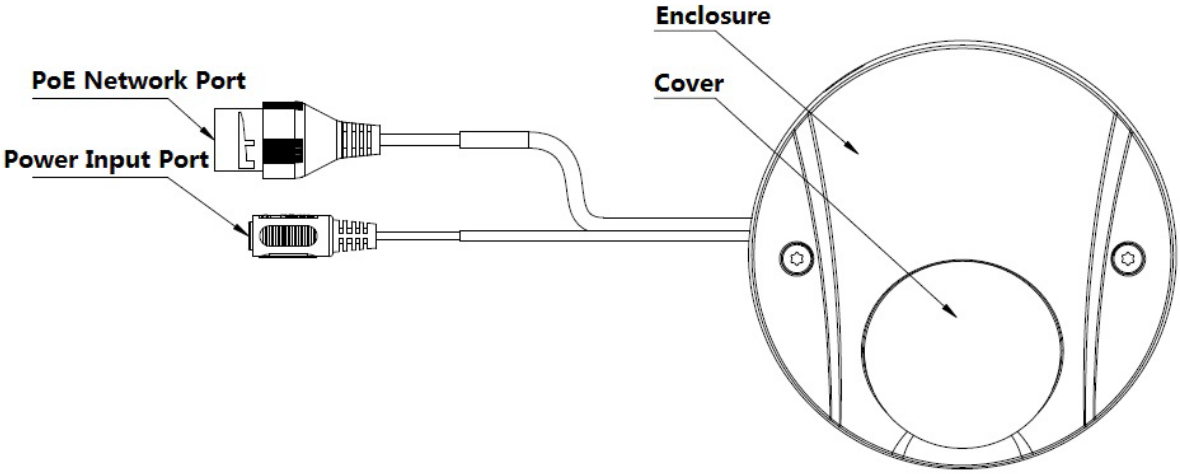

Figure 1-1

1.2 Framework and Dimension

The figures are for reference only, which are used to know the device dimension. See Figure1-2 and Figure 1-3. The unit is mm.

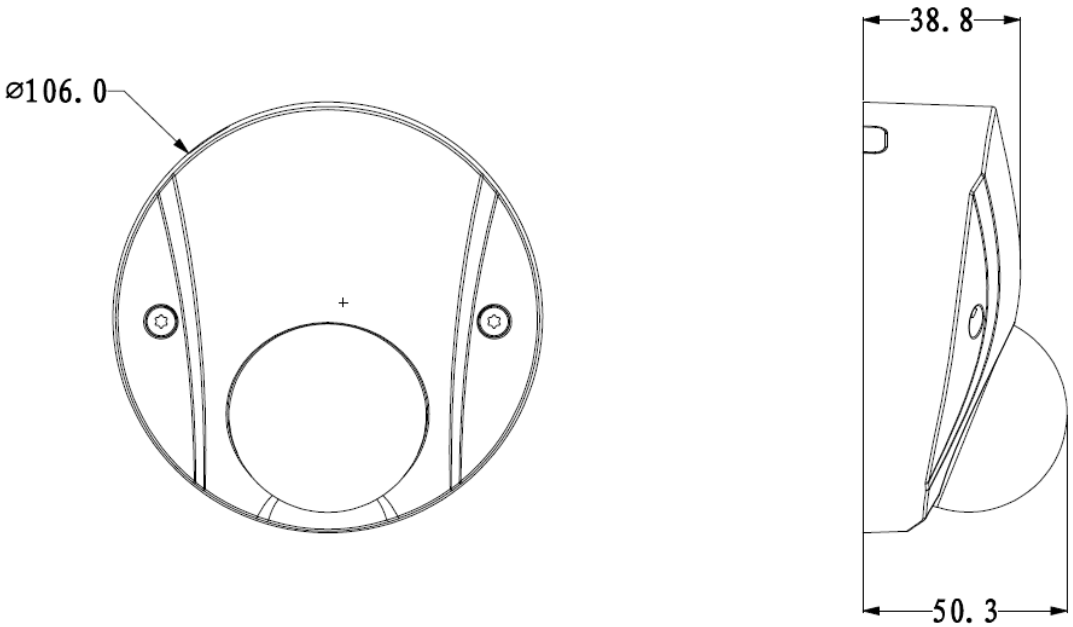

Figure1-2

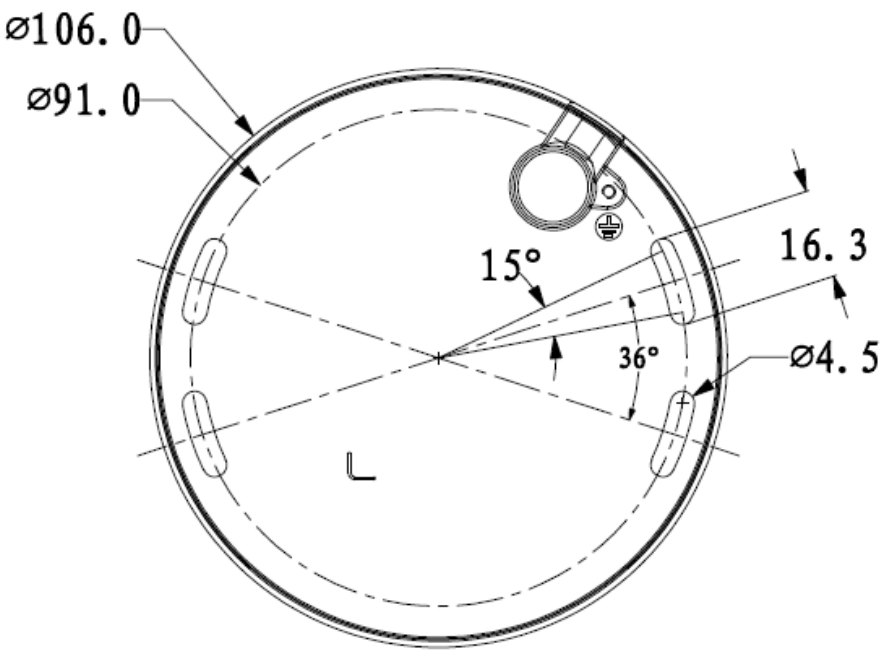

Figure 1-3

1.3 Alarm Setup

Note:

Only supported by some series products.

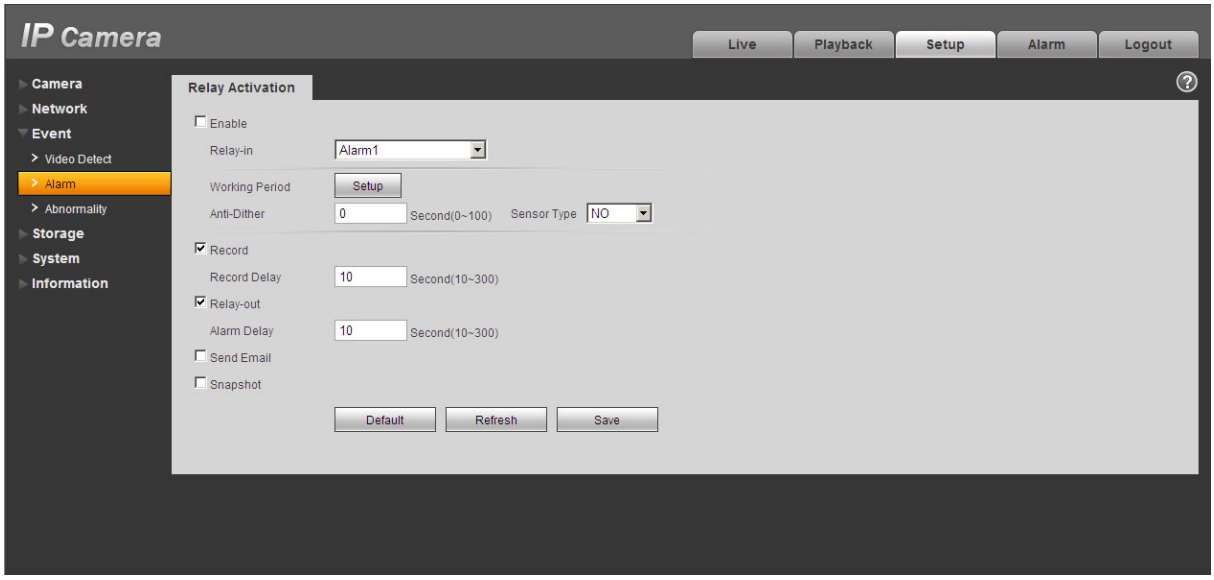

Figure1-4

Alarm input, output description:

Step 1 Connect alarm input device to the alarm input of I/O cable.

Step 2 Connect alarm output device to the alarm output of I/O cable, alarm output is collector open circuit output which connects 10K resistor to 3.3V externally.

Step 3 Open the Web, set alarm input and output correspondingly. Alarm input on WEB corresponds to I/O cable on device. When there is alarm, alarm input device will generate signal of high and low level. Set corresponding NO and NC inputs.

Step 4 Set the WEB alarm output. The alarm output is for the alarm output port of the device. It is the alarm output port of the I/O cable.

Please refer to the following figure for alarm input information. See Figure 1-5.
Alarm input: When the input signal is idle or grounded, the device can collect the different statuses of the alarm input port. When the input signal is connected to 3.3V or it is idle, the device collects the logic “1”. When the input signal is grounded, the device collects the logic “0”.

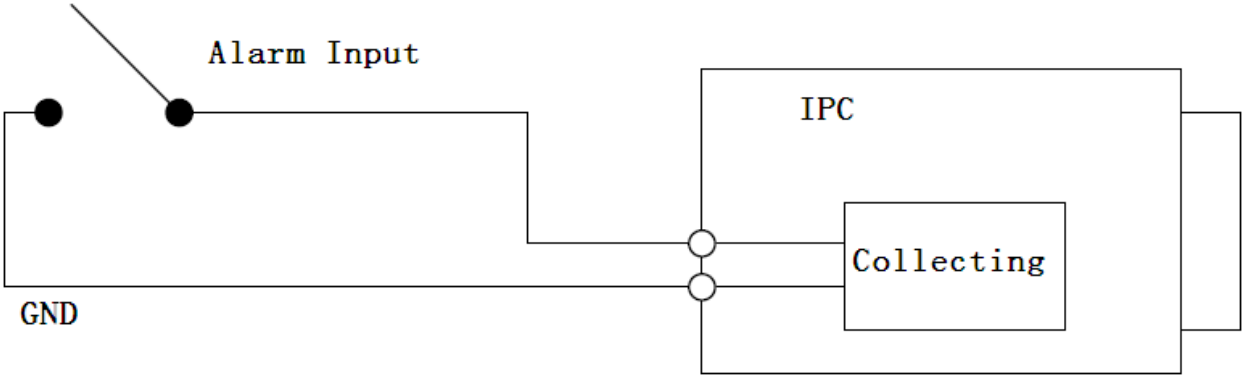

Figure 1-5

Please refer to the following figure for alarm output information. See Figure 1-6 and Figure 1-7.

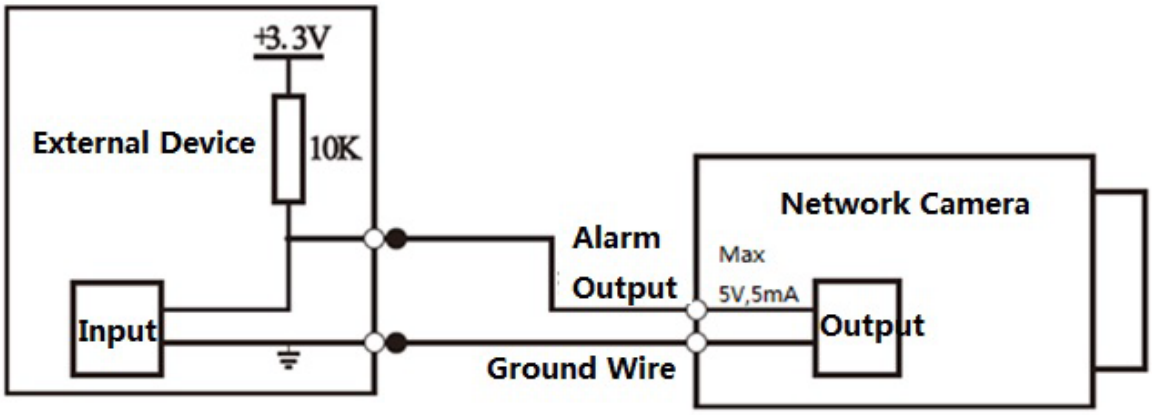

A

Figure 1-6

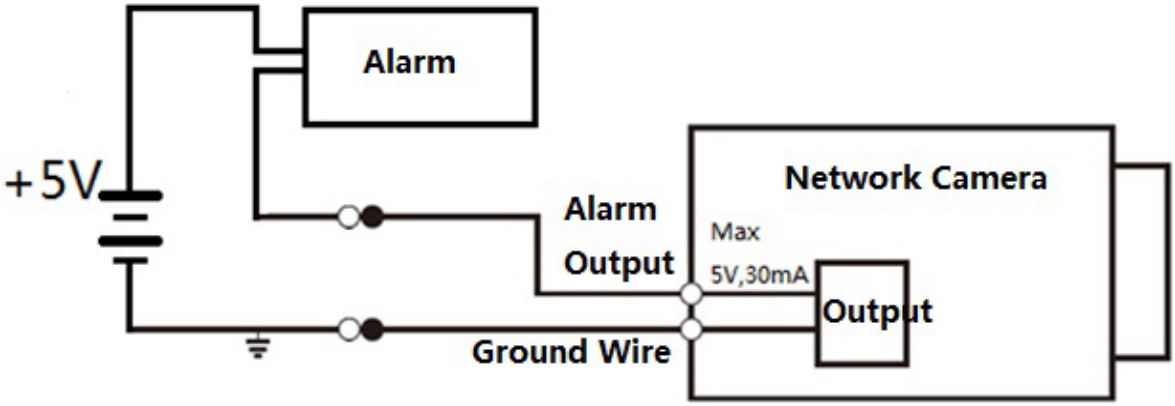

B

Figure 1-7

Mode A: Level application. Alarm output high and low level, alarm output is OC; it needs to increase pull-up resistance externally to work normally. Max external pull-up level is 5V, max port current is 5mA. After external pull-up resistance is increased, the default of output signal is high level (external pull-up voltage), and it switches to low level when there is alarm output (when the working current is 5mA, output voltage is less than 0.8V).
Mode B: Switch application. Alarm output is used to drive external circuit, max current is 30mA, max voltage is 5V, it is advised to add a relay if it is beyond the value.

2 Device Installation

2.1 Installation Steps

Note:

- Before the installation, please make sure the installation environments can at least support 3x weight of the camera and the bracket.

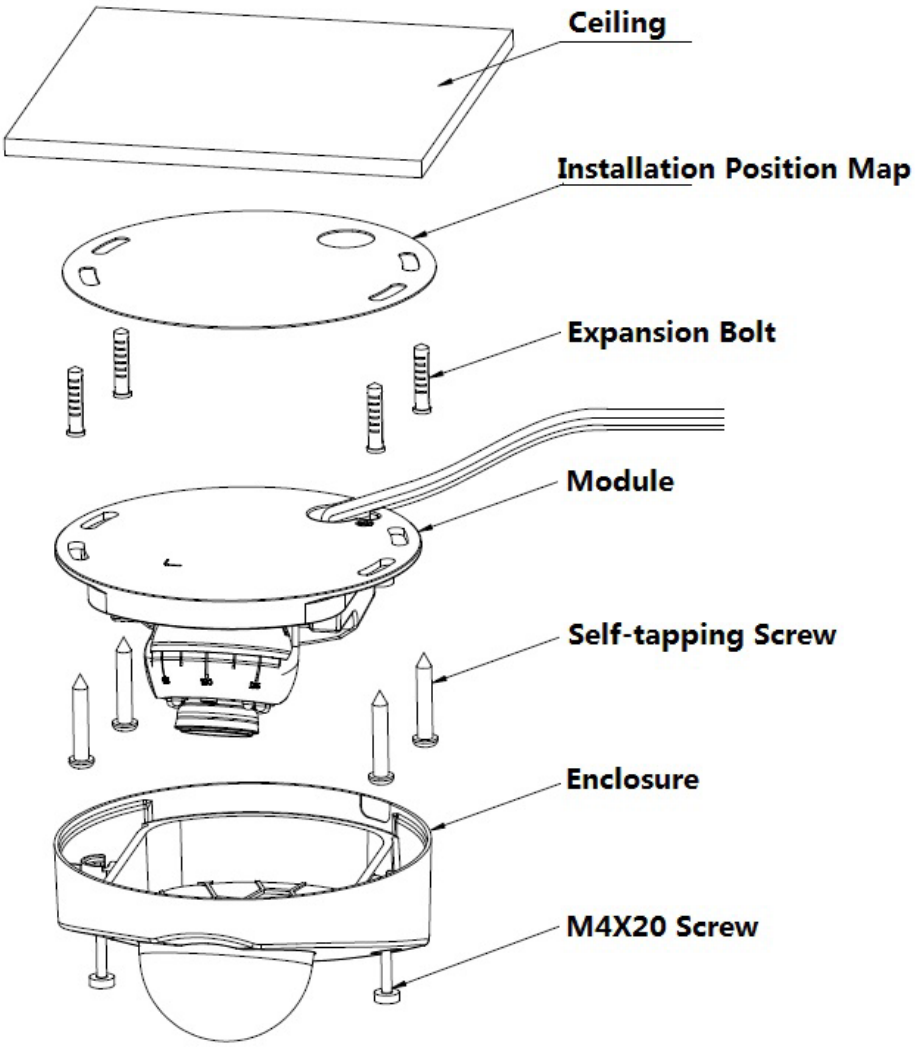

Figure 2-1

Step 1

Please take out the installation position map in the accessories bag, and then paste it on the ceiling or the wall according to the outlet location, then dig four holes on the installation surface according to the sign on the installation position map. Take out the expansion bolts from the accessories bag and insert them into the installation holes and secure firmly.

Step 2

Unscrew M4X20 screw and take down the dome enclosure.

Step 3

Adjust the position of dome pedestal according to the clients' requirements of top outlet or side outlet.

Step 4

If users choose side outlet, it needs to break the reserved gap on the enclosure, then pull the cable through the side outlet slot between the installation surface and the pedestal (please skip this step if you choose top outlet).

Step 5

Aim the screw fix holes on the dome pedestal at the expansion bolt fix hole on the installation surface, then tighten four self-tapping screws into the expansion bolts and secure firmly, and fix the dome on the installation surface.

Step 6

Adjust the lens angle according to the Figure 2-2 and Figure 2-3, secure the locking screw.

Note:

The lens horizontal adjustment can be directly adjusted manually, see Figure 2-2. As for vertical adjustment, it first needs to take out the inner hex wrench in the accessories bag and insert it into the wrench hole on the lens surface, see Figure 2-3. Finally adjust the lens by turning the inner hex wrench, the range of lens adjustment angle: pan rotation direction (-30°～+30°) , tilt rotation direction (0°～+80°), image rotation direction (0°～+360°).

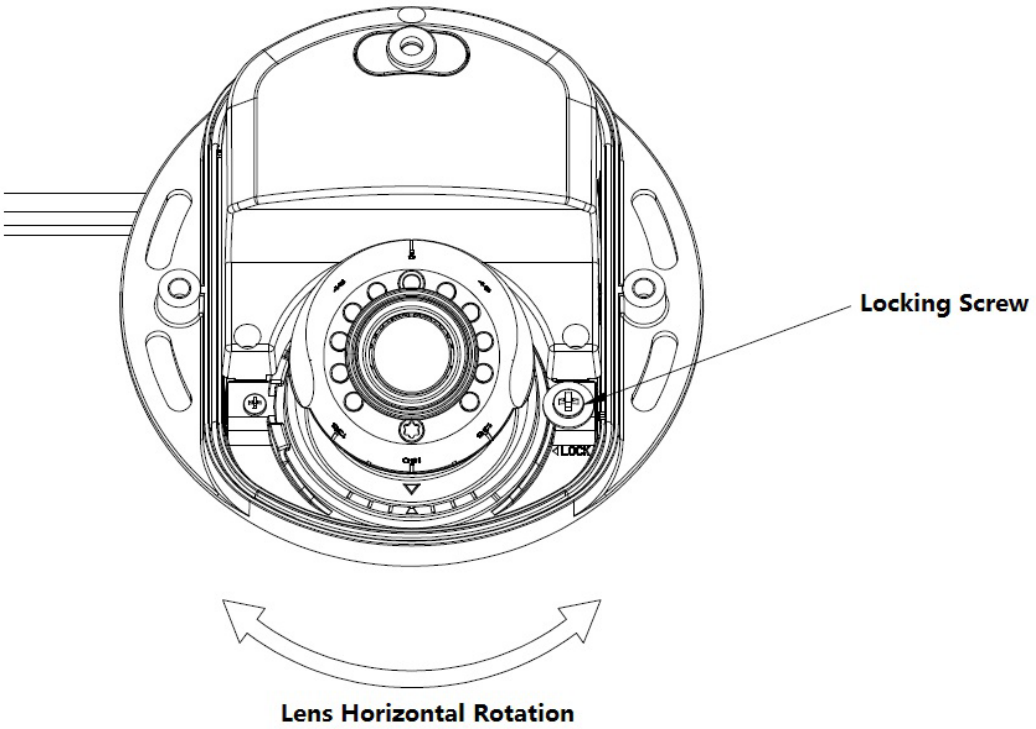

Figure 2-2

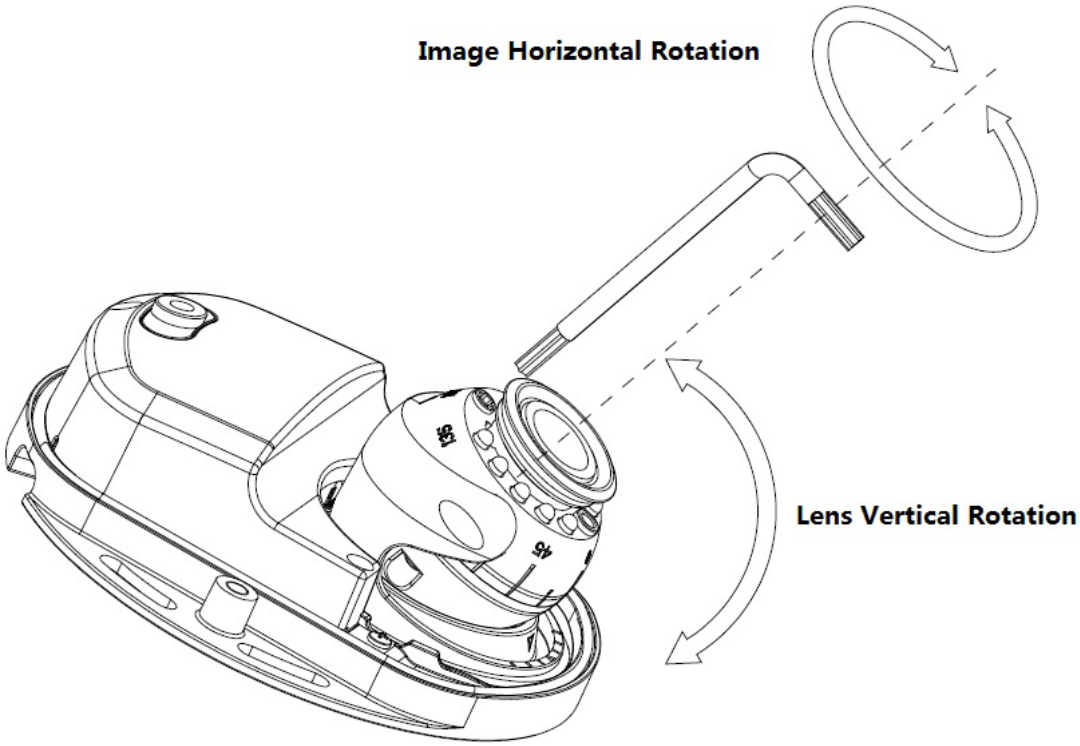

Figure 2-3

Step 7

Tighten M4X20 screw, and fix the enclosure on the dome pedestal, then installation is completed.

2.2 Micro SD Card Installation

Note:

- Please cut off the device power and turn off the device before installing Micro SD card.
- Long press the “Reset Button” for 5~10 seconds shown in Figure 2-4, then it can realize the device reset function.

Step 1

Please refer to step 3 in chapter 2.1 to take down the dome enclosure.

Step 2

Adjust the Micro SD Card to a proper direction shown in Figure 2-4 and finish installation.

Step 3

Please refer to step 5 in chapter 2.1 to finish operation.

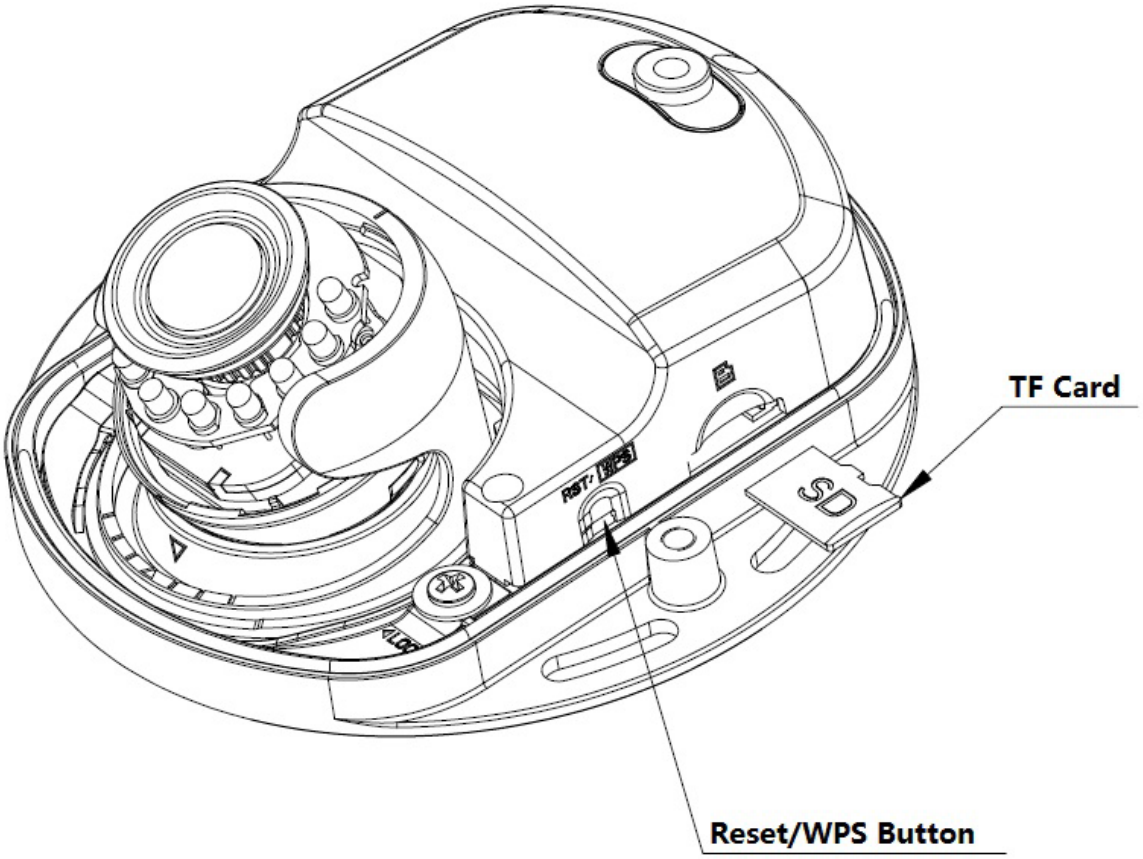

Figure 2-4

3 Network Configuration

The IP address of all the cameras is the same when leaving factory (default IP192.168.1.108), in order to make the camera get access to the network smoothly, please plan the useable IP segment reasonably according to the actual network environment.

3.1 Modify IP Address

IP address can be acquired and modified through quick configuration tool for the cameras which are accessed via wired network, it needs to connect wired network to configure wireless parameters before using wireless network cameras. In this chapter, it will introduce the approach of modifying IP address via “Quick Configuration Tool”; also you can modify the IP address in the network parameters of the WEB interface, please refer to the document in the disk << WEB Operation Manual>> for more details.

Note:

Currently the quick configuration tool only supports the cameras which apply to the same network segment with computer IP address.

Step 1 Double click the “ConfigTools.exe” and open the quick configuration tool.

Step 2 Double click the device to be configured, the system will pop out the “Login” dialog box. Enter the IP address, user name, password and port number of the camera, and click “Confirm”.

Note:

The default user name and password are admin and admin respectively, the default of port is 37777. See Figure 3-1 for more details.

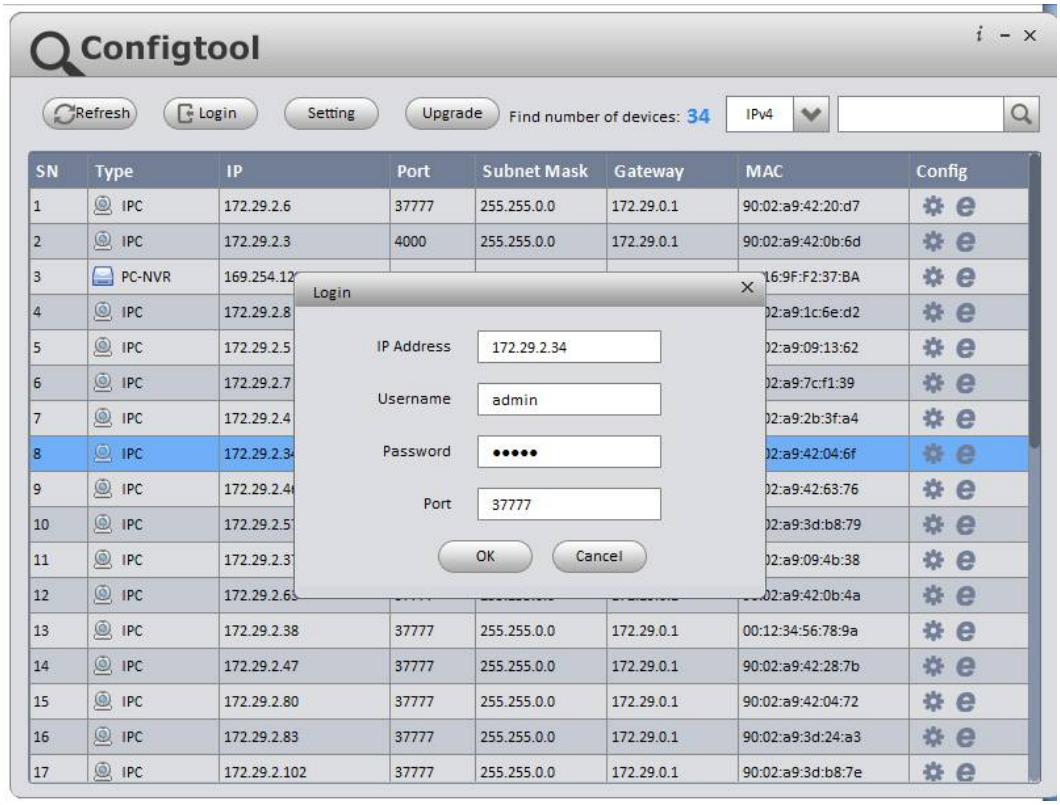

Figure 3-1

Step 3 Modify the camera IP address on the “Net” interface, click “Save” to finish modification.

See Figure 3-2 for more details.

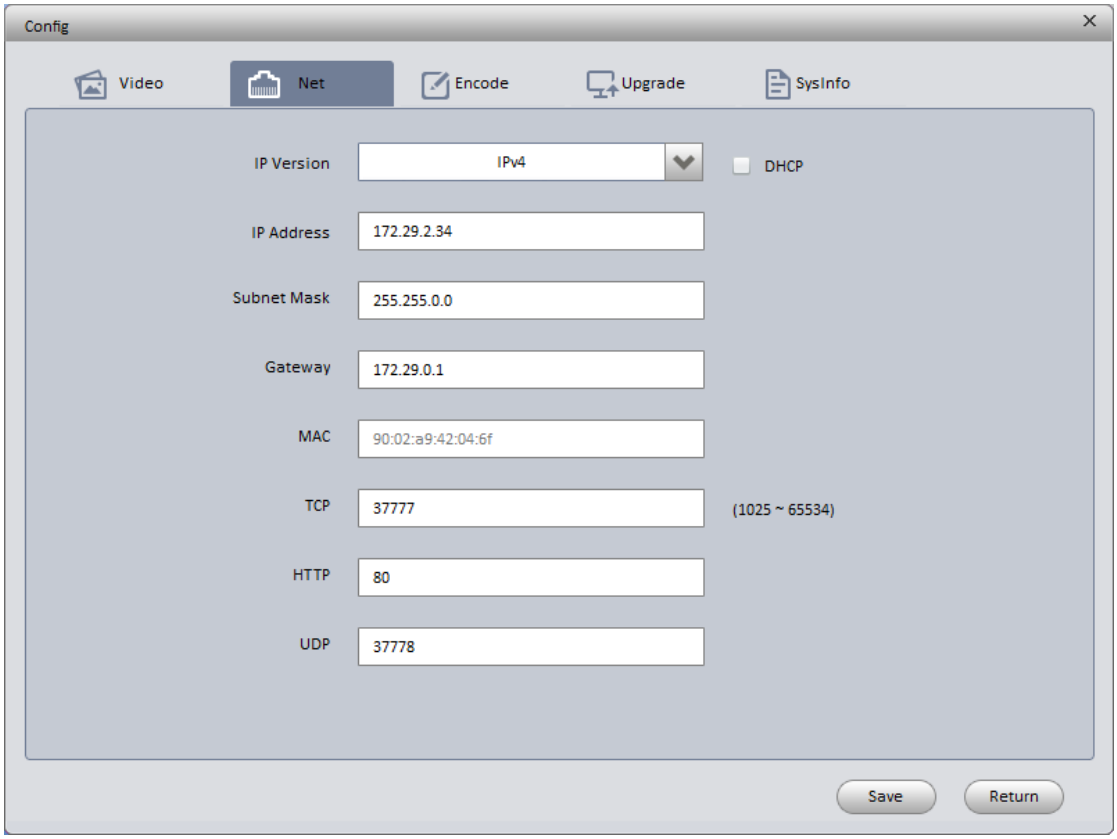

Figure 3-2

3.2 Login WEB Interface

Note:

Different devices may have different WEB interfaces, the figures below are just for reference, please refer to the document <<WEB Operation Manual>> in the disk and the actual interface for more details

Step 1 Open IE and input the modified camera IP address in the address bar.

Step 2 The login interface is shown below, please input your user name and password (Default user name is admin and password is admin respectively), click “login”.

See Figure 3-3 for more details.

Figure 3-3

Step 3 Install controls according to the system prompt; see Figure 3-4 for the WEB main interface. Please modify the administrator password as soon as possible after you successfully logged in.

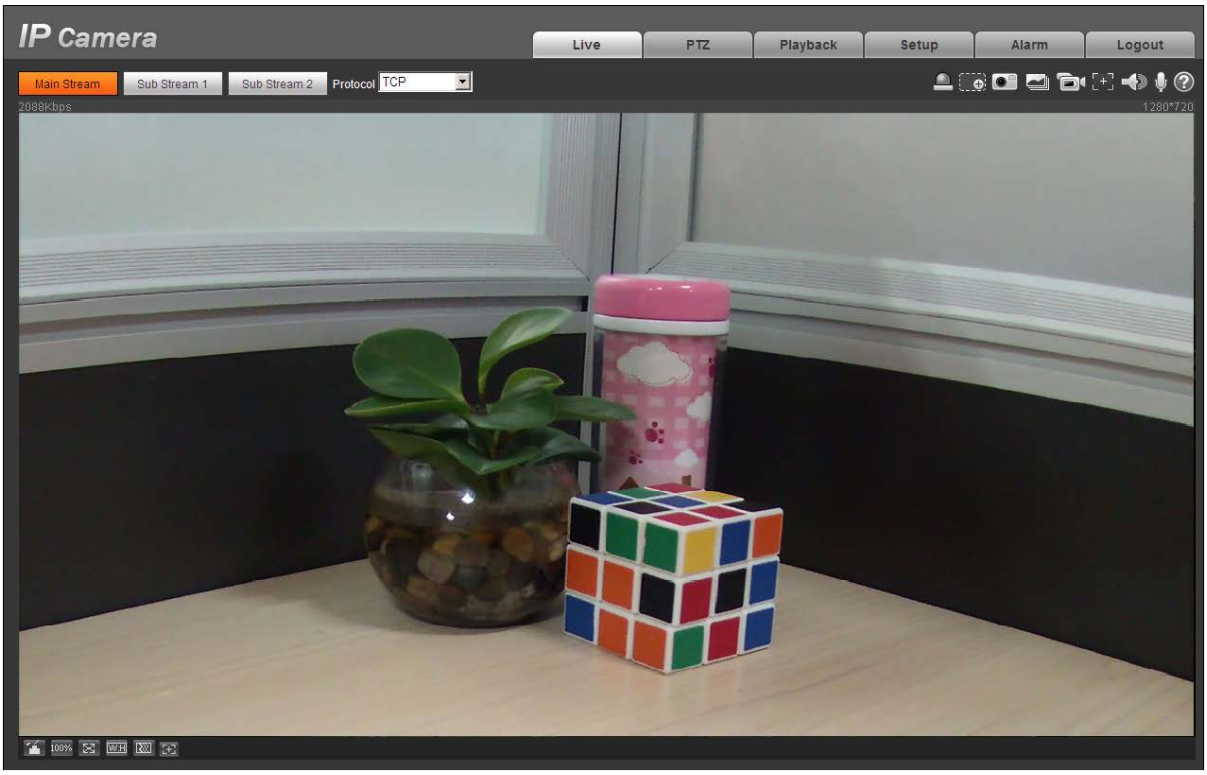

Figure 3-4

Note:

- **This quick start guide is for reference only. Slight difference may be found in user interface.**
- **All the designs and software here are subject to change without prior written notice.**
- **All trademarks and registered trademarks mentioned are the properties of their respective owners.**
- **If there is any uncertainty or controversy, please refer to the final explanation of us.**
- **Please visit our website or contact your local service engineer for more information.**