Megapixel Indoor Network Camera User’s Manual

Version 1.0.1

Welcome

Thank you for purchasing our network camera!

This user's manual is designed to be a reference tool for your system.

Please read the following safeguard and warnings carefully before you use this series product!

Please keep this user's manual well for future reference!

Important Safeguards and Warnings

1．Electrical safety

All installation and operation here should conform to your local electrical safety codes.
The power shall conform to the requirement in the SELV (Safety Extra Low Voltage) and the Limited power source is rated 12V DC or 24V AC in the IEC60950-1. (Refer to general introduction) **Please note: Do not connect two power supplying sources to the device at the same time; it may result in device damage!**
We assume no liability or responsibility for all the fires or electrical shock caused by improper handling or installation.
We are not liable for any problems caused by unauthorized modification or attempted repair.

2．Transportation security

Heavy stress, violent vibration or water splash are not allowed during transportation, storage and installation.

3．Installation

Do not apply power to the camera before completing installation.
Please install the proper power cut-off device during the installation connection.
Always follow the instruction guide the manufacturer recommended.

4．Qualified engineers needed

All the examination and repair work should be done by the qualified service engineers.
We are not liable for any problems caused by unauthorized modifications or attempted repair.

5．Environment

This series network camera should be installed in a cool, dry place away from direct sunlight, inflammable, explosive substances and etc.
Please keep it away from the electromagnetic radiation object and environment.
Please make sure the CCD (CMOS) component is out of the radiation of the laser beam device. Otherwise it may result in CCD (CMOS) optical component damage.
Please keep the sound ventilation.
Do not allow the water and other liquid falling into the camera.
Thunder-proof device is recommended to be adopted to better prevent thunder.
The grounding studs of the product are recommended to be grounded to further enhance the reliability of the camera.

6. Daily Maintenance

Please shut down the device and then unplug the power cable before you begin daily maintenance work.

Do not touch the CCD (CMOS) optic component. You can use the blower to clean the dust on the lens surface.
Always use the dry soft cloth to clean the device. If there is too much dust, please use the water to dilute the mild detergent first and then use it to clean the device. Finally use the dry cloth to clean the device.
Please put the dustproof cap to protect the CCD (CMOS) component when you do not use the camera.
Dome enclosure is the optical component, do not touch the enclosure when you are installing the device or clean the enclosure when you are doing maintenance work. Please use professional optical clean method to clean the enclosure. Improper enclosure clean method (such as use cloth) may result in poor IR effect of camera with IR function.

7. Accessories

Be sure to use all the accessories recommended by manufacturer.
Before installation, please open the package and check all the components are included.
Contact your local retailer ASAP if something is broken in your package.

Accessory Name	Amount
Network Camera Unit	1
C/CS Adapter ring	1
Quick Start Guide	1
CD	1

Table of Contents

1 General Introduction 1

1.1 Overview 1

1.2 Feature 1

1.3 Specifications 2

1.3.1 Performance 2

2 Framework 5

2.1 Rear Panel 5

2.2 Side Panel 8

2.3 Front Panel 9

2.4 Bidirectional talk 9

2.4.1 Device-end to PC 9

2.4.2 PC to the Device-end 10

2.5 Alarm Setup 10

2.5.1 Alarm Input and Output Connection 10

2.5.2 IR Light Connection 11

3 Installation 13

3.1 Lens Installation 13

3.1.1 Auto Aperture Lens 13

3.1.2 Manual Lens 13

3.1.3 Remove Lens 14

3.2 Micro SD Card 14

3.2.1 Installation 14

3.2.2 Remove 15

3.3 I/O Port 15

4 Quick Configuration Tool 17

4.1 Overview 17

4.2 Operation 17

5 Web Operation 19

5.1 Network Connection 19

5.2 Login and Main Interface 19

6 FAQ 21

Appendix Toxic or Hazardous Materials or Elements 22

1 General Introduction

1.1 Overview

This series network camera integrates the traditional camera and network video technology. It adopts audio video data collection, transmission, storage together. It can connect to the network directly without any auxiliary device.

This series network camera uses standard H.264 video compression technology and PCM, G.711a/u audio compression technology, which maximally guarantees the audio and video quality.

This series network camera has mega pixel resolution and supports 12V DC/24V AC power. It supports the wireless network application, bidirectional talk, digital water mark and etc.

It can be used alone or used in a network area. When it is used lonely, you can connect it to the network and then use a network client-end. Due to its high definition, multiple functions and various applications, this series network camera is widely used in many indoor environments and other important area surveillance.

1.2 Feature

User Management	● Different user rights for each group, one user belongs to one group. ● The user right can not exceed the group right.
Data Transmission	● Support cable network data transmission via Ethernet
Storage Function	● Support central server backup function in accordance with your configuration and setup in alarm or schedule setting ● Support record via Web and the recorded file are storage in the client-end PC. ● Support local Micro SD card hot swap. Support short-time storage when encounter disconnection. ● Support network storage such as FTP.
Alarm Function	● Real-time respond to external on-off alarm input, and video detect as user pre-defined activation setup and generate corresponding message in screen and audio prompt(allow user to pre-record audio file) ● Real-time video detect: motion detect, camera masking.
Network Monitor	● Network camera supports one-channel audio/video data transmit to network terminal and then decode. Delay is within 300ms (network bandwidth support needed) ● Max supports 20 connections. ● Adopt the following audio and video transmission protocol: HTTP, TCP, UDP, MULTICAST, RTP/RTCP, RTSP and etc. ● Support web access.
Network Management	● Realize network camera configuration and management via Ethernet. ● Support device management via web. ● Support various network protocols.
Peripheral Equipment	● Support peripheral equipment connection via the RS232 port, each peripheral equipment control protocol and interface can be set freely. ● Support serial port (RS232/RS485) transparent data transmission. ● Support the on-off alarm device to alarm via the sound or the light.
Power	● External power adapter. Support DC 12V/AC 24V power supply. **Warning!**

	Do not connect two power supplying sources to the device at the same time; it may result in device damage!
PoE	● Support Power over Ethernet (PoE). Conform to the IEEE802.3af standard. ● Connect the device to the switcher or the router that supports the PoE function to realize the network power supply. ● To guarantee proper performance, please make sure the power sourcing device can supply at least 10W power.
Assistant Function	● Day/Night mode auto switch (**ICR switch.**) ● Backlight compensation: screen auto split to realize backlight compensation to adjust the bright. ● Support system resource information and running status real-time display. Support log function. ● Support video watermark function to avoid vicious video modification. ● Support auto aperture. ● Support picture parameter setup such as electronic shutter and gain setup. ● Support dual-stream, ACF(Active frame control)

1.3 Specifications

1.3.1 Performance

Please refer to the following sheet for network camera performance specification.

Parameter \ Model		ICIP S2000
System	Main Processor	High performance DSP
	OS	Embedded LINUX
	System Resources	Support real-time network, local record, and remote operation at the same time.
	User Interface	Remote operation interface such as WEB, DSS, PSS
	System Status	Micro SD card status, bit stream statistics, log, and software version.
Video Parameter	Image Sensor	1/2.8-inch CMOS
	Pixel	1920(H)×1080(V)
	Day/Night Mode	Support day/night mode switch and IR-CUT at the same time.
	Auto Aperture	Enable
	Gain Control	Fixed/Auto
	White Balance	Manual/Auto
	BLC	On/Off
	Electronic Shutter	Manual/Auto It ranges from 1/3 to 1/10000.
	Video Compression Standard	H.264/ H.264H/ MJPEG Note: Some versions do not support H.264H.
	Video Frame Rate	PAL: Main stream (1920*1080@25fps) Extra stream (704*576@25fps)
		Main stream (1920*1080@30fps) Extra stream (704*480@30fps)

	Video Bit Rate	H.264:32Kbps-8192Kbps, adjustable MJPEG: 32~12288Kb/s, adjustable and bit rate is adjustable. Support customized setup.	H.264:32Kbps-8192Kbps, adjustable MJPEG: 32~16384Kb/s, adjustable and bit rate is adjustable. Support customized setup.
	Flip	Support	
	Mirror	Support	
	Snapshot	Max 1f/s snapshot. File extension name is JPEG	
	Privacy Mask	Each channel supports max 4 privacy mask zones	
	Video Setup	Support parameter setup such as bright, contrast.	
	Video Information	Channel title, time title, motion detect, privacy mask.	
	Lens	Optional	
	Lens Interface	C/CS optional	
Audio	**Audio Input**	1-channel， 3.5mm JACK LINE IN	
	Audio Output	1-channel， 3.5mm JACK SPEAK OUT	
	Bidirectional Talk Input	Reuse the first audio input channel	
	Audio Bit Rate	8kbps 16bit	
	Audio Compression Standard	G.711A/G.711Mu/PCM	
Video	**Motion Detect**	396 (18*22) detection zones; sensitivity level ranges from 0 to 100; area threshold ranges from 0 to 100. Activation event, alarm device, audio/video storage, image snapshot, log, email function and etc.	
Alarm Input		1-channel input，1-channel output	
Record and Backup	**Record Priority**	Manual>External alarm >Video detect>Schedule	
	Local Storage	Support local Micro SD card hot swap	
	Storage Management	Support display local storage status	
Network	**Wire Network**	1-channel wire Ethernet port, 10/100 Base-T Ethernet	
	Network Protocol	Standard HTTP, TCP/IP, ARP, IGMP, ICMP, RTSP, RTP, UDP, RTCP, SMTP, FTP, DHCP, DNS, DDNS, PPPOE, UPNP, NTP, Bonjour, SNMP, Qos, IEEE802, Syslog	
	Remote Operation	Monitor, PTZ control, system setup, file download, log information, maintenance , upgrade and etc	
AUX Interface	**Video Output**	1-channel analog video output，BNC port	
	Network Interface	1-channel Ethernet, 10/100 Base-T Ethernet	
	RS485 port	PTZ control interface. Support various protocols.	
General Parameter	**Power**	Support AC24V/DC12V power and PoE.	
	Power Consumption	<3.5W	
	Working Temperature	-20℃~+60℃	
	Working Humidify	≤95%	
	Dimensions	70*63.2*149.5	

	Weight	650g
	Installation	Support various installation modes(Enclosure and bracket are optional)

2 Framework

2.1 Rear Panel

This series network camera rear panel is shown as below. See Figure 2-1.

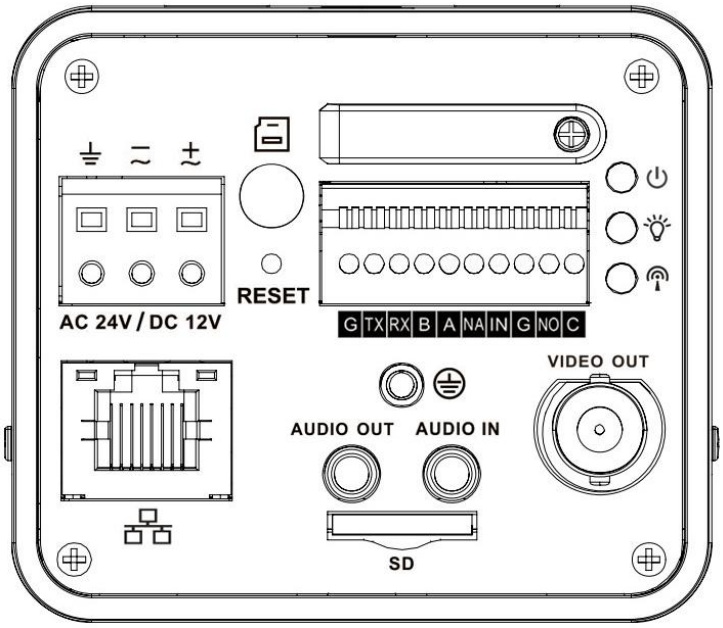

Figure 2-1 Rear panel

Note: Picture in this chapter is for reference only and actual rear panel may vary.

Please refer to the following sheet for detail information.

Interface Name		Connector	Function
VIDEO OUT	Video output port	BNC	Output analog video signal. Can connect to TV monitor to view video.
AC 24V/ DC 12V	Power port		● Power port. ● Input 12V DC or AC 24V

STATUS Indication Light	Red light		• System boot up-red light is on • System upgrades-red light flashes • System resets-red light flashes.
	Green light		• Normal working status-green light is on. • Display record status: Record-green light flashes.
	Yellow light		• Detect the wireless device-yellow light is on.
IN	Alarm input port	I/O port	Alarm input port. To receive the signal from the external alarm device.
NO	Alarm output port		Alarm output port. To output alarm signal to the alarm device. • NO: Normal open alarm output end. • C: Alarm output public end.
C			
G	GND		Alarm input ground end.
A	RS485 port		RS485_A port, control external PTZ
B			RS485_B port, control external PTZ

RX	RS232 port		RS232_RX，RS232 receive end.
TX			RS232_TX，RS232 COM send out end.
G	GND		RS232 ground end
NA	IR light port		External IR light signal control port.
RESET	RESET button		Restore factory default setup. When system is running normally, press the RESET button for at least 5 seconds, system can restore factory default setup.
AUDIO OUT	Audio output port	Audio output 3.5mm JACK port.	Output audio signal to the passive device such as earphone.
AUDIO IN	Audio input port	Audio input 3.5mm JACK port.	Input audio signal from devices such as pick-up.
LAN	Network port	Ethernet port	● Connect to standard Ethernet cable. ● Support PoE function.

Micro SD	Micro SD card port		Connect to Micro SD card. **Note** ● When you install the Micro SD card, please make sure current card is not in write mode and then you can install it to the camera. ● When you remove the Micro SD card, please make sure current card is not in write mode. Otherwise it may result in data loss or card damage. ● Before hot swap, please stop record operation.
⏚	GND		Please make sure the device is securely earthed to prevent the thunderstorm strike.

2.2 Side Panel

Please refer to the following interface for side panel dimension information. The unit is mm. See Figure 2-2.

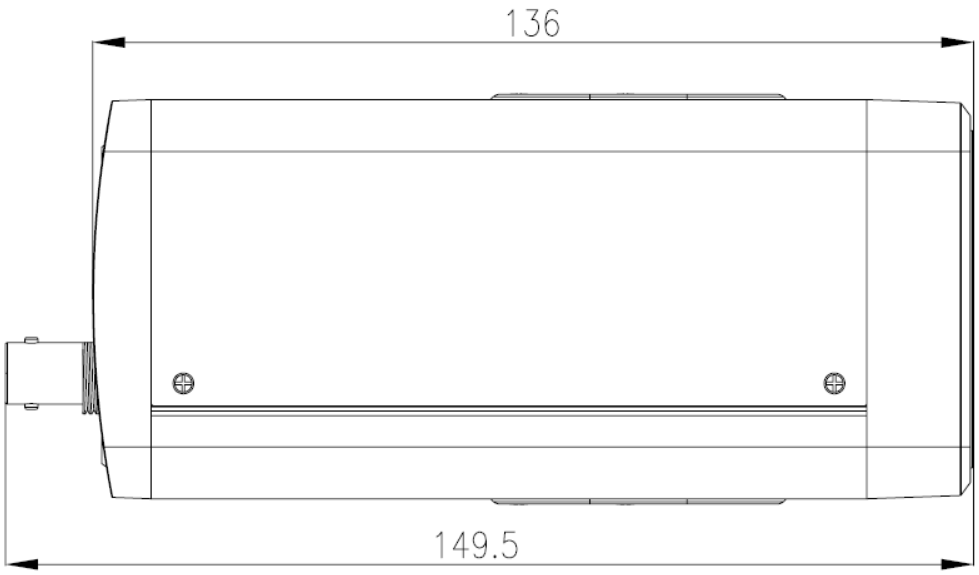

Figure 2-2 Side panel

2.3 Front Panel

Please refer to the following interface for the front panel information. The unit is mm. See Figure 2-3.

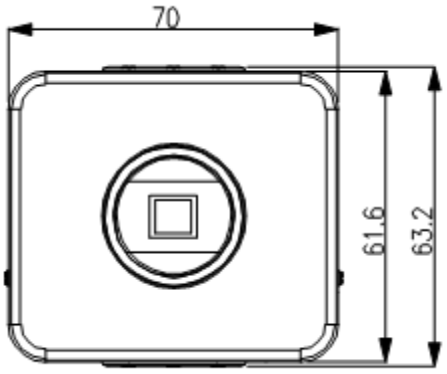

Figure 2-3 Front panel

2.4 Bidirectional talk

2.4.1 Device-end to PC

Device Connection

Please connect the speaker or the MIC to the audio input port in the device rear panel. Then connect the earphone to the audio output port in the PC.

Login the Web and then click the Audio button to enable the bidirectional talk function.

You can see the button becomes orange after you enabled the audio talk function.

Click Audio button again to stop the bidirectional talk function.

Listening Operation

At the device end, speak via the speaker or the pickup, and then you can get the audio from the earphone or sound box at the pc-end.

2.4.2 PC to the Device-end

Device Connection

Connect the speaker or the MIC to the audio input port in the PC and then connect the earphone to the audio output port in the device rear panel.

Login the Web and then click the Audio button to enable the bidirectional talk function.

You can see the button becomes orange after you enabled the audio talk function.

Click Audio button again to stop the bidirectional talk function.

Please note the listening operation is null during the bidirectional talk process.

Listening Operation

At the PC-end, speak via the speaker or the pickup, and then you can get the audio from the earphone or sound box at the device-end.

2.5 Alarm Setup

The alarm interface is shown as in Figure 2-4.

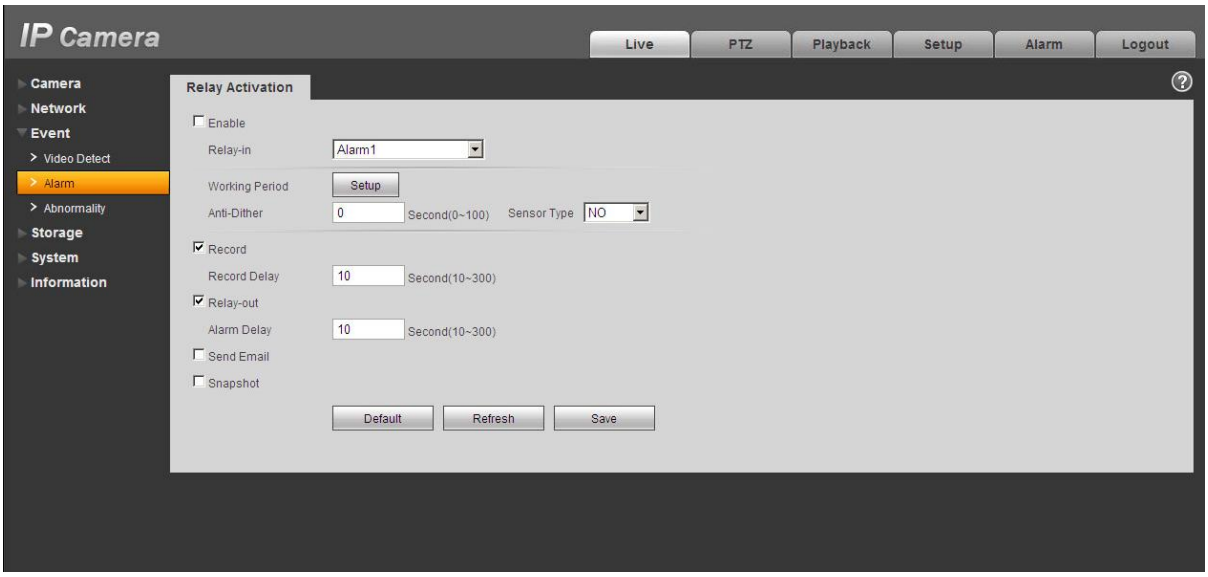

Figure 2-4 Alarm

The alarm setup interface is shown as below.

Step 1. Connect the alarm input device to the IN alarm input port on the rear panel.

Step 2. Connect the alarm output device to the NO alarm output port and C alarm output public port on the rear panel. The alarm output port supports NO (normal open) alarm device only.

Step 3. Open the Web, go to the Figure 2-4. Here you can set the alarm input setup and alarm output setup. Here the alarm input is the alarm input on the rear panel (as IN port). Then you can select the corresponding type (NO/NC) according to the high/low level type when an alarm occurs.

Step 4. Set the WEB alarm output. The alarm output 01 is the alarm output port of the device rear panel (as the NO port).

2.5.1 Alarm Input and Output Connection

Please refer to the following figure for alarm input information. See Figure 2-5.

Alarm input: When the input signal is idle or grounded, the device can collect the different statuses of the alarm input port. When the input signal is connected to the 3.3V or is idle, the device collects the logic “1”. When the input signal is grounded, the device collects the logic “0”.

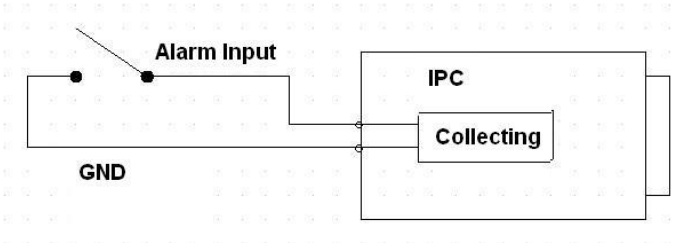

Figure 2-5 Alarm input

Please refer to the following figure for alarm output information. See Figure 2-6.
Port NO and Port C composes an on-off button to provide the alarm output.
If the type is NO, this button is normal open. The button becomes on when there is an alarm output.
If the type is NC, this button is normal off. The button becomes off when there is an alarm output.

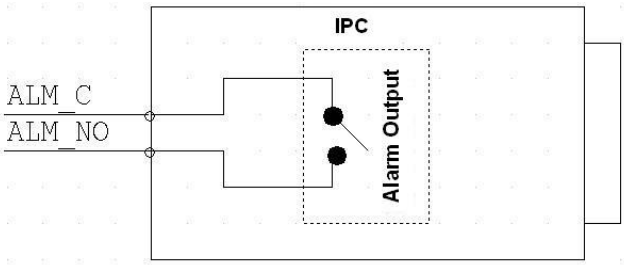

Figure 2-6 Alarm output

2.5.2 IR Light Connection

Note:

- **Device shall have external port for IR function.**
- **Log in Web, select Setup -> Camera -> Day&Night, and select sensor input. If it is not available, then you do need to set it.**

Please refer to the following figure for external IR light information. See Figure 2-7.
IR synchronization input signal. When the external IR light is on, the signal cable from the board outputs the 3.3V/1mA. It outputs the 0V when the IR light is off.

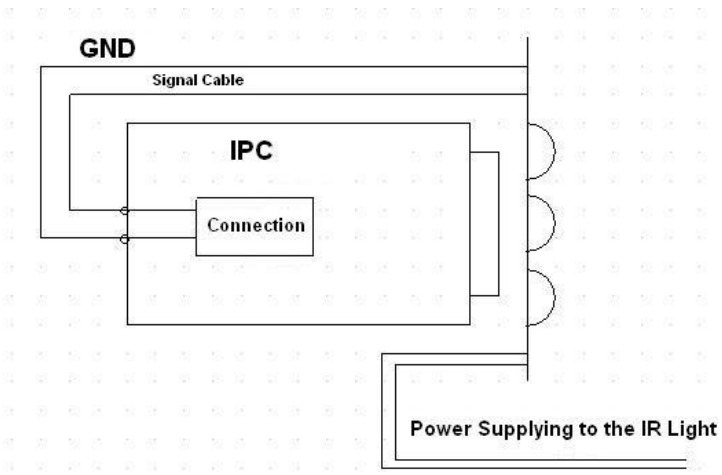

Figure 2-7 IR light connection

3 Installation

3.1 Lens Installation

3.1.1 Auto Aperture Lens

Please follow the steps listed below for auto aperture lens installation. The interface is shown as in Figure 3-1.

- Remove the CCD protection cap of the device, and then line up the lens to the proper installation position. Turn clockwise until the lens is fixed firmly.
- Insert the lens cable socket to the auto lens connector in the side panel.
- Adjust focus length.

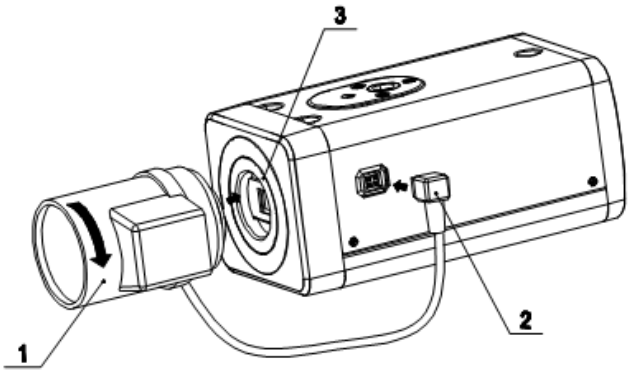

Figure 3-1 Auto aperture lens

3.1.2 Manual Lens

Install C type lens

- Remove the CCD protection cap from the device.
- Install the C/CS adapter to the camera. Turn clockwise to secure against the focusing ring firmly.
- Line up the C lens to the installation position of the C/CS adapter. Turn clockwise to fix the lens.
- Use slotted screwdriver to fasten the screw near the focusing ring and then turn counter clockwise to move the focusing ring out for several millimeters. Now you can focus manually and check the video is clear or not. If you can not see the clear video, you can adjust via the flange-back.
- After you completed the focus setup, use the slotted screwdriver to fix the screw firmly. Fasten the focusing ring. Now the installation completed.

Install CS type lens

- Remove the CCD protection cap from the device.
- Line up the CS lens to the lens installation position of camera focusing ring. Turn clockwise to fix the lens.
- Use slotted screwdriver to fasten the screw near the focusing ring and then turn counter clockwise to move the focusing ring out for several millimeters. Now you can focus manually

and check the video is clear or not. If you cannot see the clear video, you can adjust via the flange-back.

- After you completed the focus setup, use the slotted screwdriver to fix the screw firmly. Fasten the focusing ring. Now the installation completed.

See Figure 3-2.

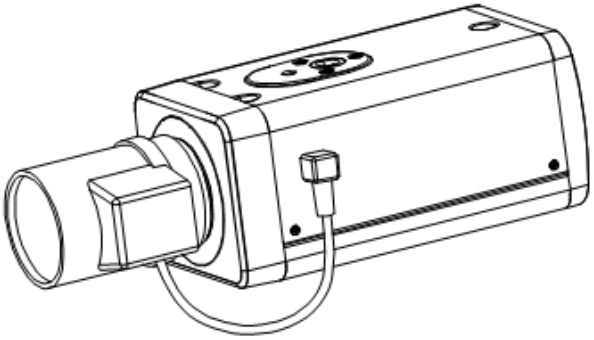

Figure 3-2 Manual lens

3.1.3 Remove Lens

Please follow the steps listed below to remove lens. The interface is shown as in Figure 3-3.

- Turn the lens counter clockwise and then remove it from the camera.
- Unplug the auto lens cable socket from the auto lens connector. If you are using the manual aperture lens, please skip to the following step.
- If there is no lens, please put the CCD protection cap back to protect the CCD.

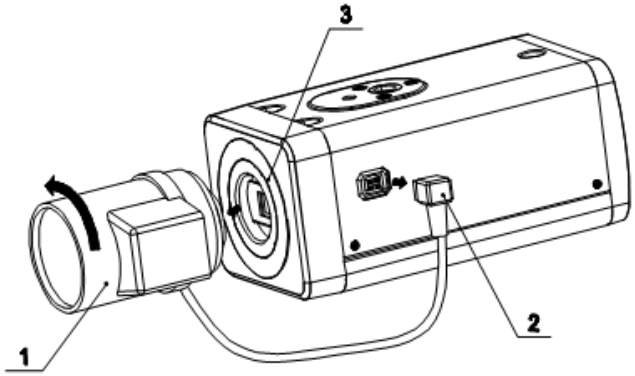

Figure 3-3 Remove lens

3.2 Micro SD Card

3.2.1 Installation

Please see Figure 3-4 to insert Micro SD card into the SD slot. The slot is flexible, so the Micro SD card can be embedded via lightly pressing.

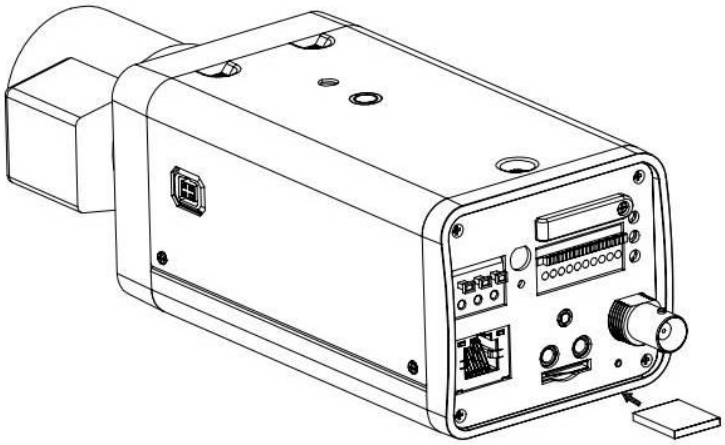

Figure 3-4 Micro SD card installation

3.2.2 Remove

Please see Figure 3-5 to lightly press Micro SD card and it will automatically eject.

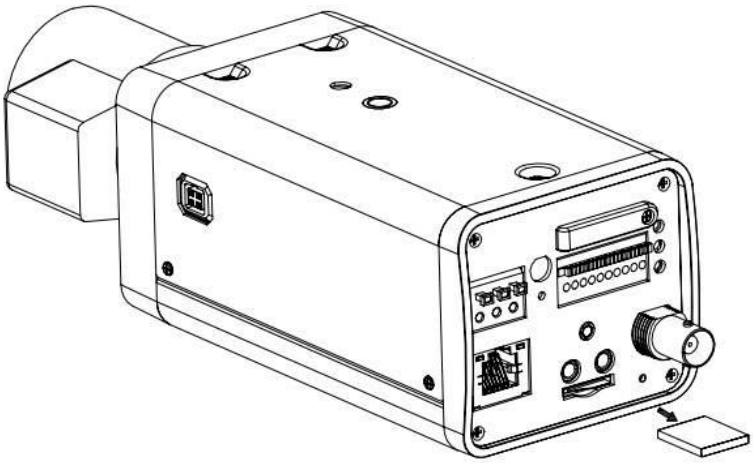

Figure 3-5 Remove Micro SD card

3.3 I/O Port

Install Cable

Please follow the steps listed below to install the cable. See Figure 3-6.

Use the small slotted screwdriver to press the corresponding button of cable groove. Insert the cable into the groove and then release the screwdriver.

Remove Cable

Please follow the steps listed below to remove the cable.

Use the small slotted screwdriver to press the corresponding button of cable groove. Remove the cable out of the groove and then release the screwdriver.

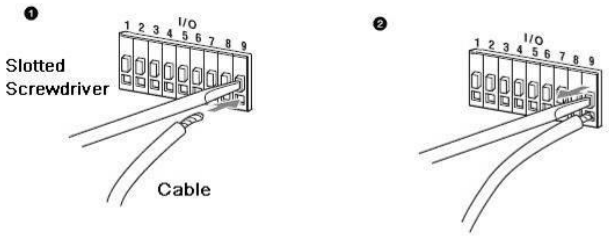

Figure 3-6 I/O port

4 Quick Configuration Tool

4.1 Overview

Quick configuration tool can search current IP address, modify IP address. At the same time, you can use it to upgrade the device.
Please note the tool only applies to the IP addresses in the same segment.

4.2 Operation

Double click the “ConfigTools.exe” icon, you can see an interface is shown as in Figure 4-1.
In the device list interface, you can view device IP address, port number, subnet mask, default gateway, MAC address and etc.

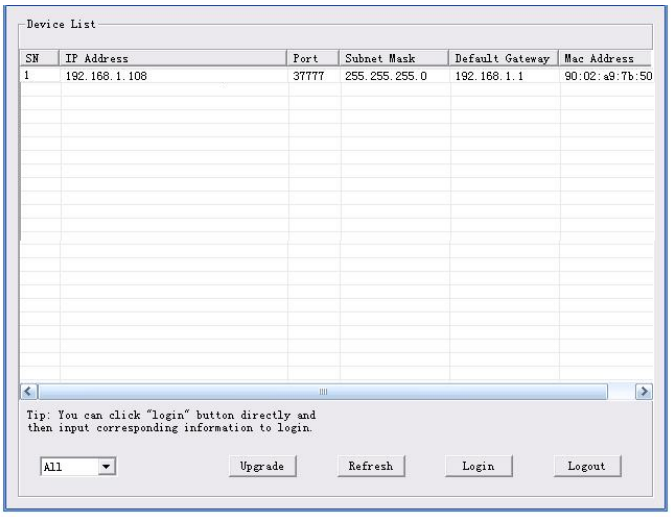

Figure 4-1 Search interface

Select one IP address and then right click mouse, you can see an interface is shown as in Figure 4-2.
Select the “Open Device Web” item; you can go to the corresponding web login interface.

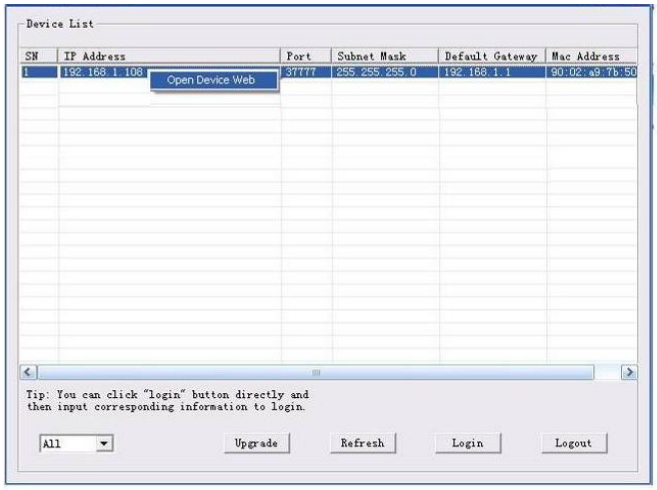

Figure 4-2 Search interface 2

If you want to modify the device IP address without logging in the device web interface, you can go to the configuration tool main interface to set.

In the configuration tool search interface (Figure 4-1), please select a device IP address and then double click it to open the login interface. Or you can select an IP address and then click the Login button to go to the login interface. See Figure 4-3.

In Figure 4-3, you can view device IP address, user name, password and port. Please modify the corresponding information to login.

Please note the port information here shall be identical with the port value you set in TCP port in Web Network interface. Otherwise, you cannot login the device.

If you are using device background upgrade port 3800 to login, other setups are all invalid.

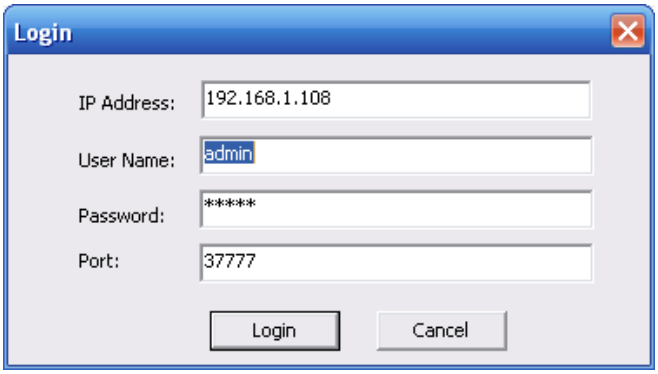

Figure 4-3 Login prompt

After you logged in, the configuration tool main interface is shown as below. See Figure 4-4.

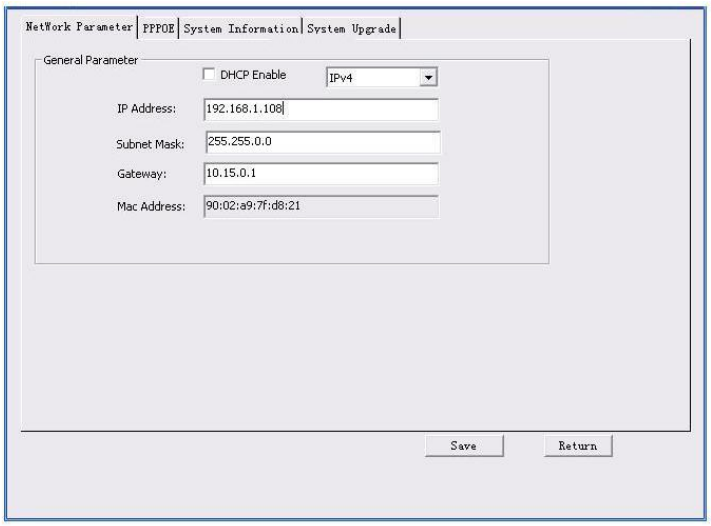

Figure 4-4 Main interface

For detailed information and operation instruction of the quick configuration tool, please refer to the *Quick Configuration Tool User's Manual* included in the resources CD.

5 Web Operation

This series network camera products support the Web access and management via PC.
Web includes several modules: Monitor channel preview, system configuration, alarm and etc.

5.1 Network Connection

Please follow the steps listed below for network connection.

- Make sure the network camera has connected to the network properly.
- Please set the IP address, subnet mask and gateway of the PC and the network camera respectively. Network camera default IP address is 192.168.1.108. Subnet mask is 255.255.255.0. Gateway is 192.168.1.1
- Use order ping ***.***.***.***(* network camera address) to check connection is OK or not.

5.2 Login and Main Interface

Open IE and input network camera address in the address bar. See Figure 5- 1.

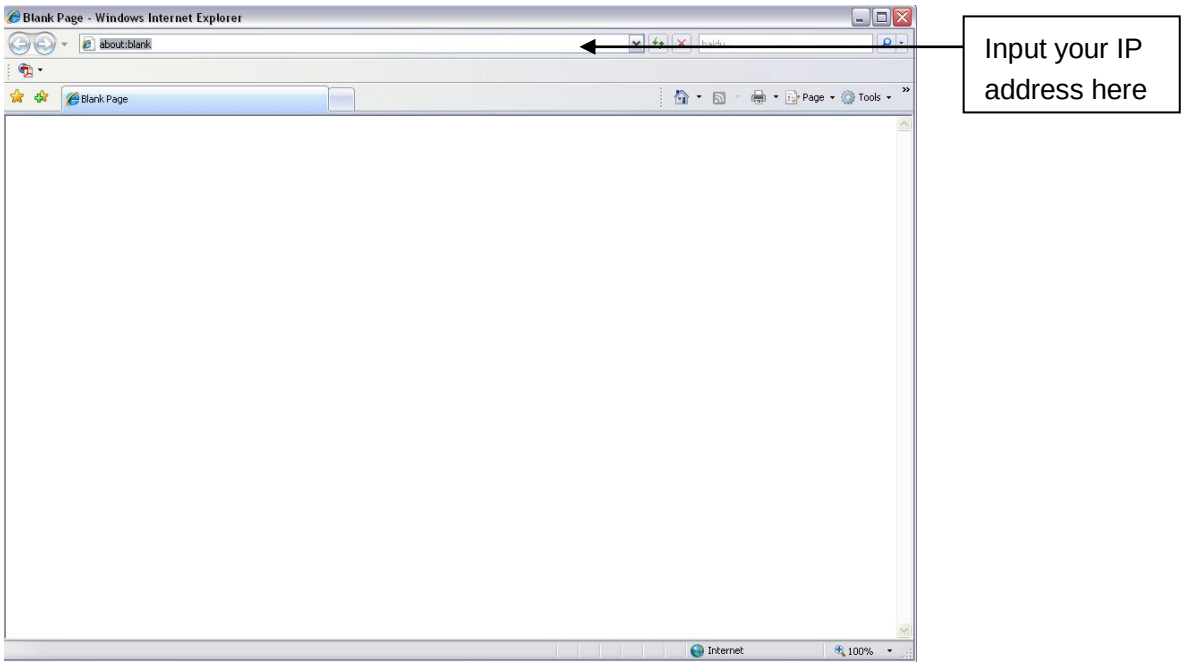

Figure 5- 1 IP address

The login interface is shown as below. See Figure 5- 2.
Please input your user name and password.
Default factory name is admin and password is admin.
Note: For security reasons, please modify your password after you first login.

Figure 5- 2 Web login

After you successfully logged in, please install WEB plug-in unit. Please refer to the Web Operation Manual included in the resource CD for detailed operation instruction.
See Figure 5- 3.

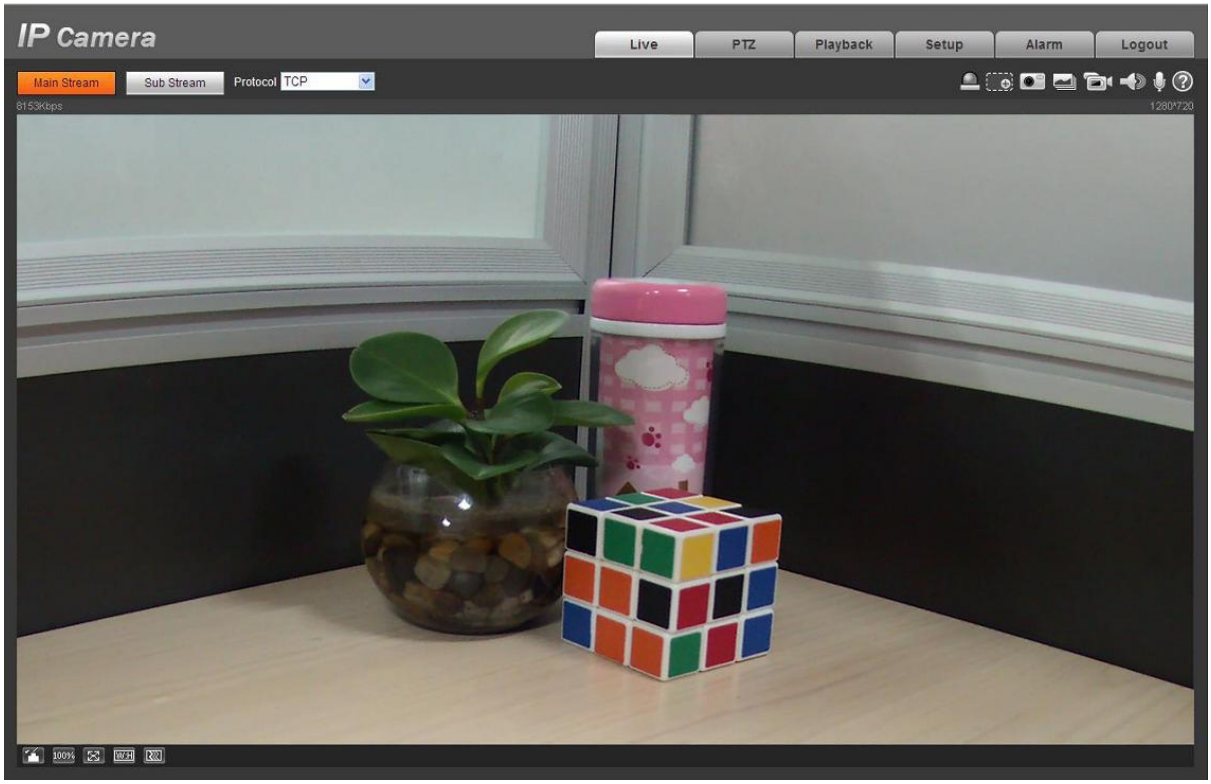

Figure 5- 3 Web monitoring window

6 FAQ

Bug	
I can not boot up the device or can not control the device.	Please click RESET button for at least five seconds to restore factory default setup.
Micro SD card hot swap	Before draw out SD card, please stop record or snapshot first and then wait for at least 15 seconds to remove the SD card. All the operations before is to maintain data integrity. Otherwise you can lose all the data in the SD card!
Micro SD card write times	Do not set the Micro SD card as the storage media to storage the schedule record file. It may damage the Micro SD card duration.
I can not use the disk as the storage media.	When disk information is shown as hibernation or capacity is 0, please format it first (Via Web).
I can not upgrade the device via network.	The status indication light is shown as red when network upgrade operation failed. You can use port 3800 to continue upgrade.
Recommended Micro SD card brand	Kingston 4GB, Kingston 16GB, Kingston32GB, Transcend 16GB, SanDisk 4GB, SanDisk 32GB. Usually we recommend the 4GB (or higher) high speed card in case the slow speed results in data loss.
Audio function	Please use active device for the audio monitor input, otherwise there is no audio in the client-end.

Appendix Toxic or Hazardous Materials or Elements

Component Name	Toxic or Hazardous Materials or Elements					
	Pb	Hg	Cd	Cr VI	PBB	PBDE
Circuit Board Component	○	○	○	○	○	○
Case	○	○	○	○	○	○
Wire and Cable	○	○	○	○	○	○
Packing Components	○	○	○	○	○	○
Accessories	○	○	○	○	○	○

O: Indicates that the concentration of the hazardous substance in all homogeneous materials in the parts is below the relevant threshold of the SJ/T11363-2006 standard.

X: Indicates that the concentration of the hazardous substance of at least one of all homogeneous materials in the parts is above the relevant threshold of the SJ/T11363-2006 standard. During the environmental-friendly use period (EFUP) period, the toxic or hazardous substance or elements contained in products will not leak or mutate so that the use of these (substances or elements) will not result in any severe environmental pollution, any bodily injury or damage to any assets. The consumer is not authorized to process such kind of substances or elements, please return to the corresponding local authorities to process according to your local government statutes.

Note

- **This user's manual is for reference only. Slight difference may be found in user interface.**
- **All the designs and software here are subject to change without prior written notice.**
- **All trademarks and registered trademarks mentioned are the properties of their respective owners.**
- **If there is any uncertainty or controversy, please refer to the final explanation of us.**