# HD Pinhole Network Camera User’s Manual

**Version 1.0.0**

# Welcome

Thank you for purchasing our network camera!
This user’s manual is designed to be a reference tool for your system.
Please read the following safeguard and warnings carefully before you use this series product!
Please keep this user’s manual well for future reference!

# Important Safeguards and Warnings

## 1．Electrical safety

All installation and operation here should conform to your local electrical safety codes.
The power shall conform to the requirement in the SELV (Safety Extra Low Voltage) and the Limited power source is rated 12V DC or 24V AC in the IEC60950-1. (Refer to general introduction)
**Please note: Do not connect two power supplying sources to the device at the same time; it may result in device damage! The product must be grounded to reduce the risk of electronic shock.**
We assume no liability or responsibility for all the fires or electrical shock caused by improper handling or installation.
We are not liable for any problems caused by unauthorized modification or attempted repair.

## 2．Transportation security

Heavy stress, violent vibration or water splash are not allowed during transportation, storage and installation.

## 3．Installation

Do not apply power to the camera before completing installation.
Please install the proper power cut-off device during the installation connection.
Always follow the instruction guide the manufacturer recommended.

## 4．Qualified engineers needed

All the examination and repair work should be done by the qualified service engineers.
We are not liable for any problems caused by unauthorized modifications or attempted repair.

## 5．Environment

This series network camera should be installed in a cool, dry place away from direct sunlight, inflammable, explosive substances and etc.
Please keep it away from the electromagnetic radiation object and environment.
Please make sure the CCD (CMOS) component is out of the radiation of the laser beam device. Otherwise it may result in CCD (CMOS) optical component damage.
Please keep the sound ventilation.
Do not allow the water and other liquid falling into the camera.
Thunder-proof device is recommended to be adopted to better prevent thunder.
The grounding studs of the product are recommended to be grounded to further enhance the reliability of the camera.

## 6. Daily Maintenance

Please shut down the device and then unplug the power cable before you begin daily maintenance work.

Do not touch the CCD (CMOS) optic component. You can use the blower to clean the dust on the lens surface.
Always use the dry soft cloth to clean the device.  If there is too much dust, please use the water to dilute the mild detergent first and then use it to clean the device. Finally use the dry cloth to clean the device.
Please put the dustproof cap to protect the CCD (CMOS) component when you do not use the camera.
Dome enclosure is the optical component, do not touch the enclosure when you are installing the device or clean the enclosure when you are doing maintenance work. Please use professional optical clean method to clean the enclosure. Improper enclosure clean method (such as use cloth) may result in poor IR effect of camera with IR function.

## 7. Accessories

Be sure to use all the accessories recommended by manufacturer.
Before installation, please open the package and check all the components are included.
Contact your local retailer ASAP if something is broken in your package.

| Accessory Name | Amount |
|---|---|
| Network Camera Unit | 1 |
| Quick Start Guide | 1 |
| Installation Accessories Bag | 1 |
| CD | 1 |

# Table of Contents

1 General Introduction ..... 1

1.1 Overview ..... 1

1.2 Features ..... 1

1.3 Specifications ..... 2

1.3.1 Performance ..... 2

2 Device Framework ..... 4

2.1 Port Name ..... 4

2.2 Dimension ..... 5

2.3 Bidirectional Talk ..... 7

2.3.1 Device-end to PC-end ..... 7

2.3.2 PC-end to the Device-end ..... 7

2.4 Alarm Setup ..... 7

3 Device Installation ..... 8

4 Quick Configuration Tool ..... 9

4.1 Overview ..... 9

4.2 Operation ..... 9

5 Web Operation ..... 11

5.1 Network Connection ..... 11

5.2 Login and Main Interface ..... 11

6 FAQ ..... 13

Appendix Toxic or Hazardous Materials or Elements ..... 14

# 1 General Introduction

## 1.1 Overview

This series network camera integrates the traditional camera and network video technology. It adopts video data collection, transmission together. It can connect to the network directly without any auxiliary device.

This series network camera uses standard H.264 video compression technology, which maximally guarantees the video quality.

It supports the IR night vision function. In the night environments, the device can use the IR light to highlight the object which is suitable for the surveillance function in the low illumination environments. The built-in waterproof design conforms to the IP 66 level. It has the sound waterproof function suitable for use in the outdoor environments.

It can be used alone or used in a network area. When it is used lonely, you can connect it to the network and then use a network client-end. Due to its multiple functions and various uses, this series network camera is widely used in many environments such as home, office, bank, road monitor and etc.

## 1.2 Features

| | |
|---|---|
| **User Management** | ● Different user rights for each group, one user belongs to one group.<br>● The user right shall not exceed the group right. |
| **Storage Function** | ● Support central server backup function in accordance with your configuration and setup in alarm or schedule setting<br>● Support record via Web and the recorded file are storage in the client-end PC.<br>● Support network storage function such as FTP. |
| **Data Transmission** | ● Support data transmission via Ethernet. |
| **Network Monitor** | ● Network camera supports one-channel video data transmit to network terminal and then decode. Delay is within 270ms (network bandwidth support needed)<br>● Max supports 20 connections.<br>● Adopt the following video transmission protocol: HTTP, TCP, UDP, MULTICAST, RTP/RTCP, RTSP and etc.<br>● Support web access. |
| **Network Management** | ● Realize network camera configuration and management via Ethernet.<br>● Support device management via web or client-end.<br>● Support abundant network protocols. |
| **Power** | ● External power adapter DC12V.<br>● Support PoE.<br>**Warning！**<br>● **Do not connect these two power supplying sources to the device at the same time; it may result in device damage!** |
| **Assistant Function** | ● Log function<br>● Support system resource information and running status real-time display.<br>● Day/Night mode auto switch.(with ICR switch)<br>● Support picture parameter setup such as electronic shutter and gain setup.<br>● Backlight compensation: screen auto split to realize backlight compensation to adjust the bright. |

| | |
|---|---|
| | ● Support digital WDR.<br>● Support video watermark function to avoid vicious video modification.<br>● Support dual bit streams, ACF. |

## 1.3 Specifications

### 1.3.1 Performance

Please refer to the following sheet for network camera performance specification.

| Parameter \ Model | | ICIP T801 |
|---|---|---|
| System | Main Processor | High performance DSP |
| | OS | Embedded LINUX |
| | System Resources | Support real-time network monitoring, local record, and remote operation at the same time. |
| | User Interface | Remote operation interface such as WEB, DSS, PSS |
| | System Status | Micro SD card status info, bit stream statistics, log, and software version. |
| Video Parameter | Image Sensor | 1/3-inch CMOS |
| | Pixel | 1280(H) ×960(V) |
| | Day/Night Mode | Support day/night mode switch, don't support ICR function. |
| | Gain Control | Manual/Auto |
| | White Balance | Manual/Auto |
| | BLC | Off/Auto |
| | Electronic Shutter | Auto /Manual |
| | Video Compression Standard | H.264/MJPEG |
| | Video Frame Rate | PAL:<br>Main stream(1280*960@25fps)<br>extra stream(D1@25fps, CIF@25fps) |
| | | NTSC:<br>Main stream(1280*960@30fps)<br>extra stream(D1@30fps, CIF@30fps) |
| | Video Bit Rate | H.264: 48Kb/s-8M/s adjustable;<br>MJPEG: adjustable and bit rate is adjustable.<br>Support customized setup. |
| | Video Flip | Support mirror.<br>Support flip function. |
| | Snapshot | Max 1f/s snapshot. File extension name is JPEG. |
| | Privacy Mask | Supports max 4 privacy mask zones |
| | Video Setup | Support parameter setup such as brightness, saturation, hue and contrast. |
| | Video Information | Channel title, time, motion detect, tampering detect. |
| | Lens | 3.6mm/F2.8 |
| | Lens Interface | M12 |
| Audio | Audio Input | 1-ch, RCA LINE IN |
| | Audio Output | 1-ch, RCA LINE OUT |
| | Bidirectional Talk Input | Reuse the first audio input channel |
| | Audio Bit Rate | 16kbps 16bit |

| | | |
|---|---|---|
| | **Audio Compression Standard** | G.711a/G.711Mu/PCM |
| **Video** | **Motion Detect** | 396 (18*22) detection zones; sensitivity level ranges from 0 to 100; area threshold ranges from 0 to 100. |
| **Alarm Port** | | 1-ch input, 1-ch output |
| **Record and Backup** | **Record Priority** | Manual>External alarm>Video detect>Schedule |
| | **Storage Management** | Support Micro SD card storage (support 64GB); FTP remote server storage. |
| **Network** | **Wired Network** | 1-channel wired Ethernet port, 10/100 Base-T Ethernet |
| | **Network Protocol** | HTTP,TCP,ARP,RTSP,RTP,UDP,RTCP,SMTP,FTP,DHCP,DNS, DDNS,PPPoE,IPv4/v6,SNMP,IGMP,ICMP,Qos,UPnP,NTP |
| | **Remote Operation** | Monitor, system setup, file download, log information, maintenance , upgrade and etc. |
| | **Platform Interface Standard** | Support ONVIF, CGI, PSIA protocol |
| **Aux Interface** | **Video Output** | 1-ch analog video output, BNC port |
| | **Power** | DC 12V/POE |
| **General Parameter** | **Power Consumption** | 7W MAX |
| | **Working Temperature** | -30℃～+60℃ |
| | **Working Humidify** | ≤95% |
| | **Dimensions(mm)** | 109.7*82.8*24.0 |
| | **Weight** | ≤460g（Excluding box） |
| | **Installation** | Support several installation modes |

# 2 Device Framework

## 2.1 Port Name

**Note:**

The framework figures in this chapter are just for reference, there is some minor difference between the appearance of products and the corresponding figures, so please refer to the actual products.

You can refer to the following figures for port information. See Figure 2-1 and Figure 2-2

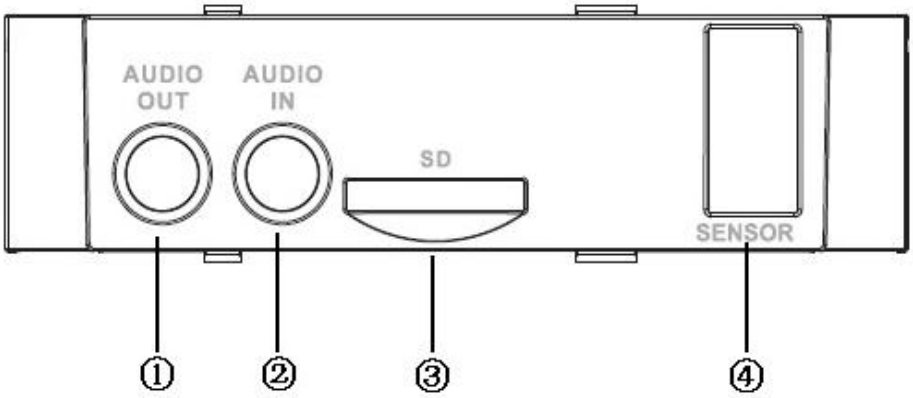


Figure 2-1

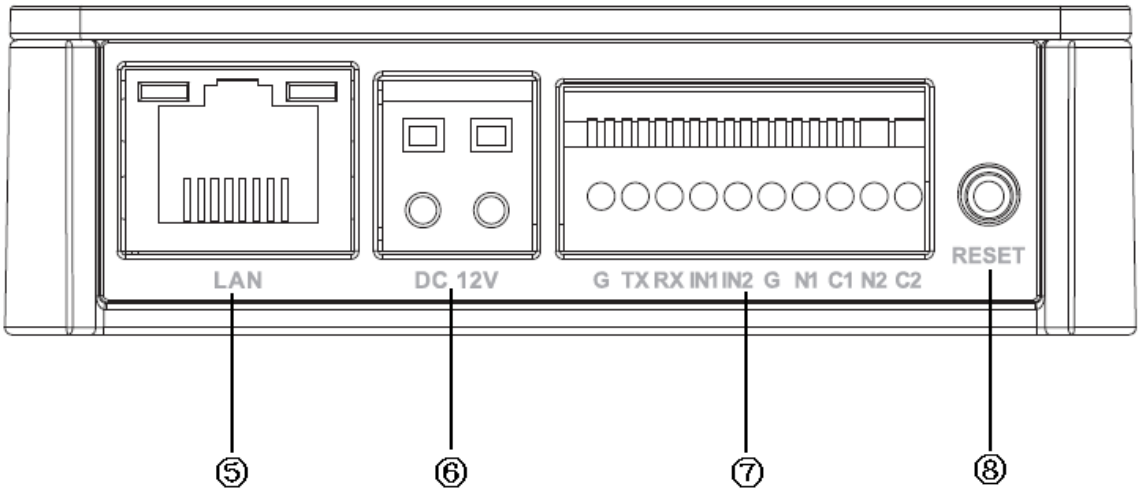


Figure 2-2

Please refer to the following sheet for detailed information about port function.

| SN | Port | Port Name | Connector | Function Note |
|---|---|---|---|---|
| 1 | AUDIO OUT | Audio output port | RCA | Output audio signal to the speakers and other devices. |
| 2 | AUDIO IN | Audio input port | RCA | Input audio signal, receive analog audio signal from pickup and other devices. |
| 3 | Micro SD Card | Micro SD | Micro SD Card slot | Micro SD card storage |

| SN | Port | Port Name | Connector | Function Note |
|---|---|---|---|---|
| 4 | SENSOR | Sensor port | Sensor board | Connect front end Sensor board, get image data. |
| 5 | LAN | Network port | Ethernet port | Connect standard Ethernet cable |
| 6 | DC12V | Power input port | - | Power port, input DC12 V or POE power supply. |
| 7 | I/O | I/O port | - | Connect I/O port. |
| 8 | Reset Button | Reset | - | It is used to restore factory default settings for the device.<br>Note:<br>Continuously press the button for over 5 seconds in the situation where the device is working normally, then the system configuration info can be restored to factory default settings. |

Sheet 2-1

Please refer to Sheet 2-2 for more details about I/O port.

| Port Name | Cable Port name | Function Note |
|---|---|---|
| I/O port | G | GND |
| | TX | 232 sending port. |
| | RX | 232 receiving port. |
| | IN1 | Alarm input port1，receive on-off signal from external alarm source. |
| | IN2 | Alarm input port 2，receive on-off signal from external alarm source. |
| | G | GND |
| | N1 | Alarm output port1 |
| | C1 | |
| | N2 | Alarm output port2 |
| | C2 | |

## 2.2 Dimension

Please refer to the following figures for dimension information. The unit is mm. See Figure 2- 3 to Figure 2-5.

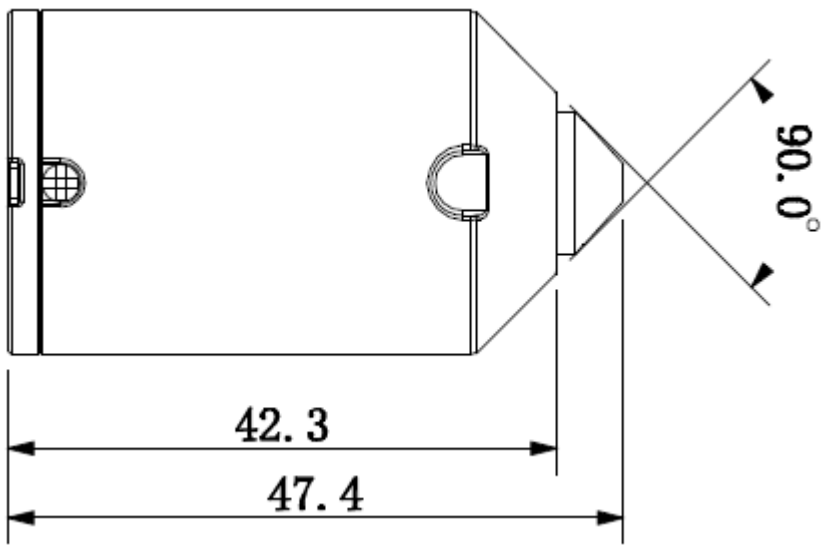


Figure 2-3

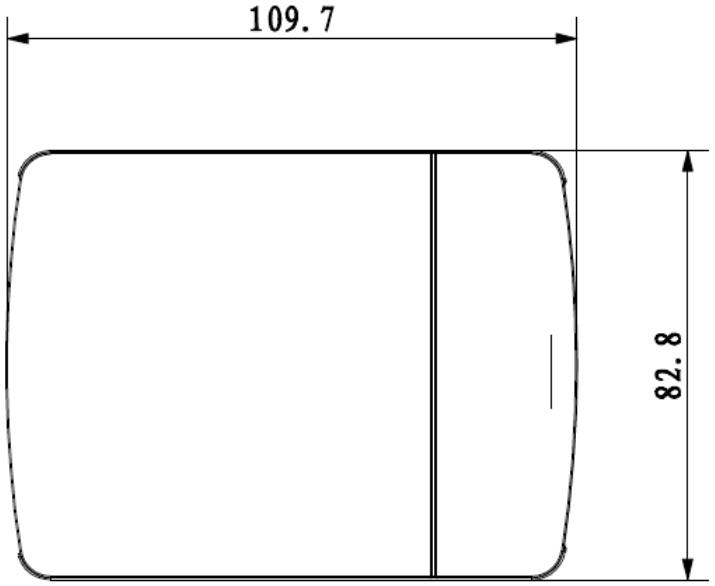


Figure 2-4

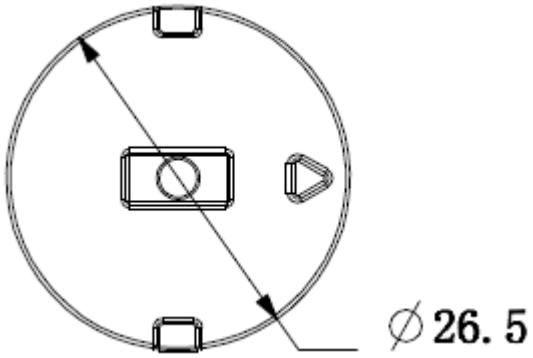


Figure 2-5

## 2.3 Bidirectional Talk

### 2.3.1 Device-end to PC-end

**Device Connection**

Please connect the speaker or the MIC to the audio input port of the device. Then connect the earphone to the audio output port of the PC.

Login the Web and then click the Talk button to enable the bidirectional talk function.

You can see the button becomes orange after you enabled the bidirectional talk function.

Click Talk button again to stop the bidirectional talk function.

**Listening Operation**

At the device end, speak via the speaker or the pickup, and then you can get the audio from the earphone or sound box at the pc-end.

### 2.3.2 PC-end to the Device-end

**Device Connection**

Connect the speaker or the MIC to the audio input port of the PC and then connect the earphone to the audio output port of the device.

Login the Web and then click the Talk button to enable the bidirectional talk function.

You can see the button becomes orange after you enabled the audio talk function.

Click Talk button again to stop the bidirectional talk function.

**Please note the on-site listening operation is null during the bidirectional talk process.**

**Listening Operation**

At the PC-end, speak via the speaker or the pickup, and then you can get the audio from the earphone or sound box at the device-end.

## 2.4 Alarm Setup

Please refer to Figure2-6 for more information.

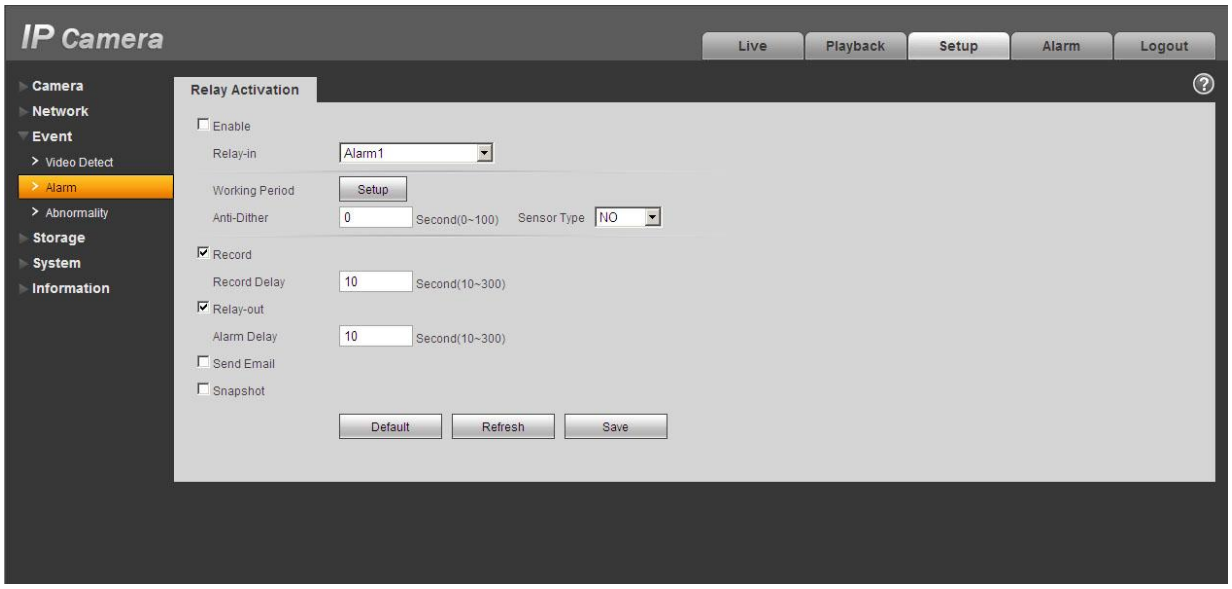


Figure 2-6

# 3 Device Installation

**Important**

**Please make sure the installation surface can min support the 3X weight of the camera and the bracket.**

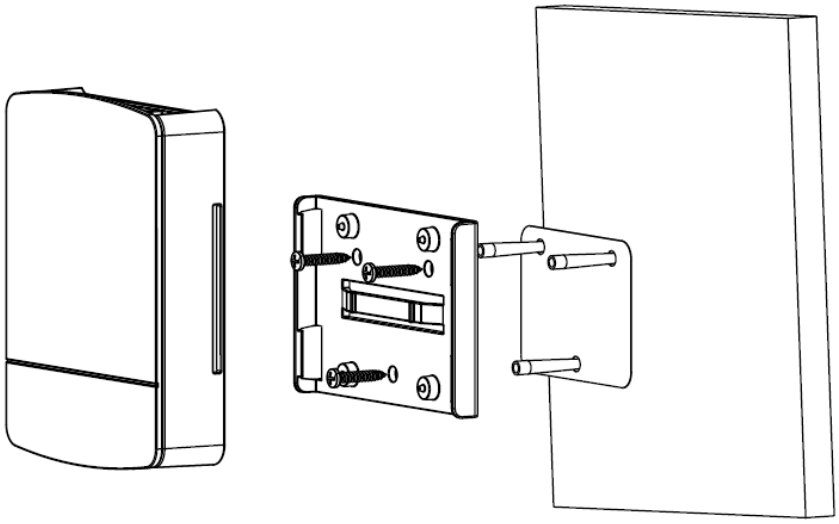

Figure 3-1

Please see Figure 3-1.

**Step 1**

Stick installation position map to designated surface where you will install the device

**Step 2**

Dig a hole according to position of hole on installation position map.

**Step 3**

Open accessories bag, take out expansion bolt and insert it into the hole you just dug.

**Step 4**

Open accessories bag, take out screws. Tighten the 3 screws to fix the device on the installation surface where the bolts are located.

**Step 5**

Put the camera body into the installation bracket directly.

**Step 6**

Connect front-end lens to camera body by cable.

# 4 Quick Configuration Tool

## 4.1 Overview

Quick configuration tool can search current IP address, modify IP address. At the same time, you can use it to upgrade the device.
Please note the tool only applies to the IP addresses in the same segment.

## 4.2 Operation

Double click the “ConfigTools.exe” icon, you can see an interface. In the device list interface, you can view device IP address, port number, subnet mask, default gateway, MAC address and etc.
Select one IP address and then right click mouse, you can see an interface is shown as in Figure 4-1.
Select the “Open Device Web” item; you can go to the corresponding web login interface.

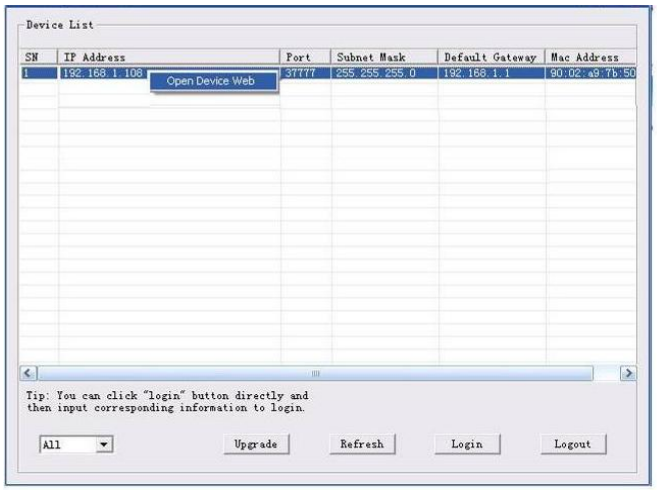


Figure 4-1

If you want to modify the device IP address without logging in the device web interface, you can go to the configuration tool main interface to set.
In the configuration tool search interface, please select a device IP address and then double click it to open the login interface. Or you can select an IP address and then click the Login button to go to the login interface. See Figure 4-2.
In Figure 4-2, you can view device IP address, user name, password and port. Please modify the corresponding information to login.
Please note the port information here shall be identical with the port value you set in TCP port in Web Network interface. Otherwise, you cannot login the device.
If you are using device background upgrade port 3800 to login, other setups are all invalid.

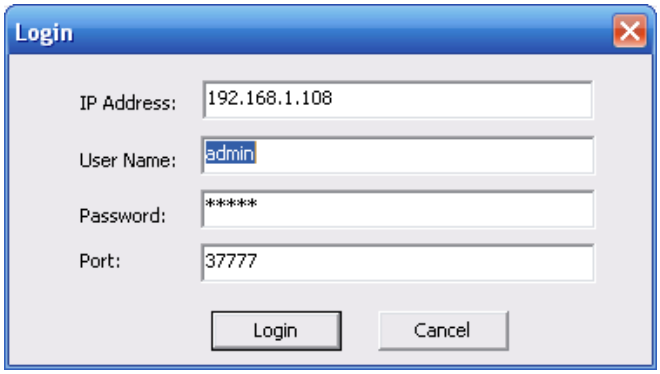


Figure 4-2 Login prompt

After you logged in, the configuration tool main interface is shown as below. See Figure 4-3.

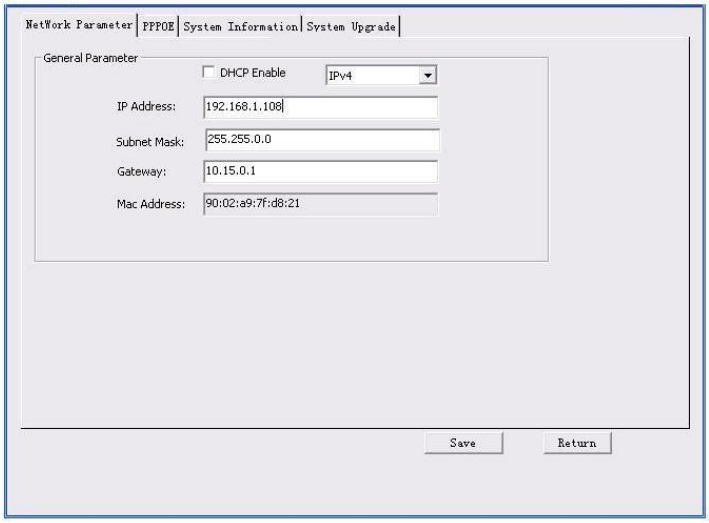


Figure 4-3 Main interface

**For detailed information and operation instruction of the quick configuration tool, please refer to the *Quick Configuration Tool User's Manual* included in the resources CD.**

# 5 Web Operation

This series network camera products support the Web access and management via PC.
Web includes several modules: Monitor channel preview, system configuration, alarm and etc.

## 5.1 Network Connection

Please follow the steps listed below for network connection.

- Make sure the network camera has connected to the network properly.
- Please set the IP address, subnet mask and gateway of the PC and the network camera respectively. Network camera default IP address is 192.168.1.108. Subnet mask is 255.255.255.0. Gateway is 192.168.1.1
- Use order ping ***.***.***.***(* network camera address) to check connection is OK or not.

## 5.2 Login and Main Interface

Open IE and input network camera address in the address bar. See Figure 5- 1.

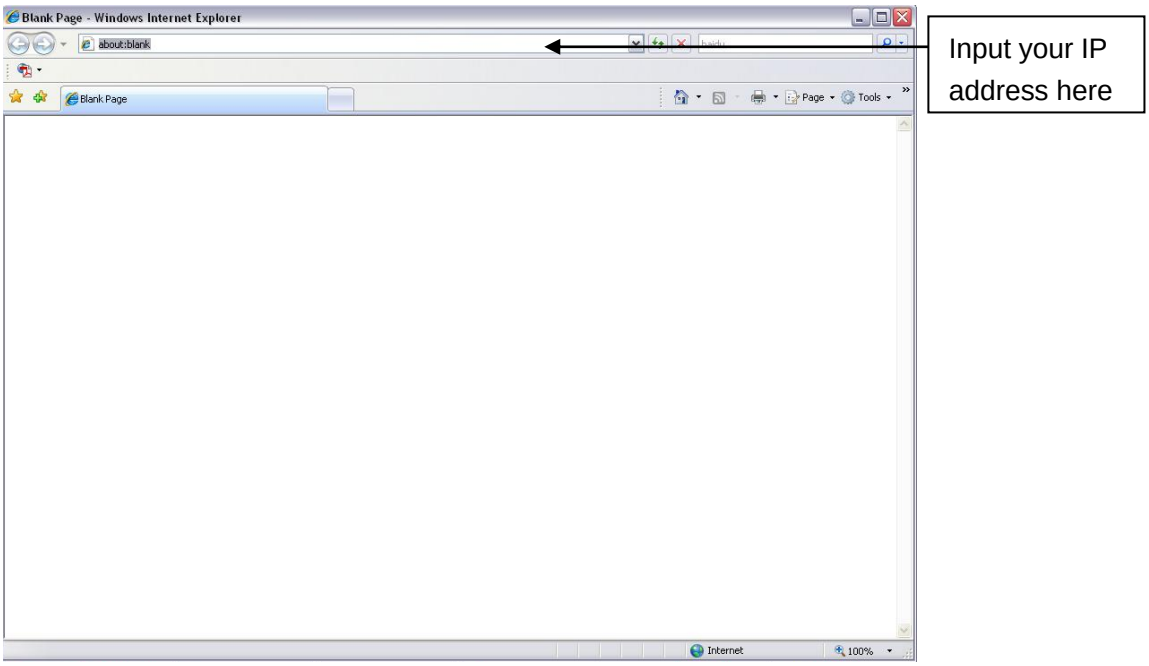


Figure 5- 1 IP address

The login interface is shown as below. See Figure 5- 2.
Please input your user name and password.
Default factory name is admin and password is admin.
**Note: For security reasons, please modify your password after you first login.**

Figure 5- 2 Web login

After you successfully logged in, please install WEB plug-in unit. Please refer to the Web Operation Manual included in the resource CD for detailed operation instruction.
See Figure 5- 3.

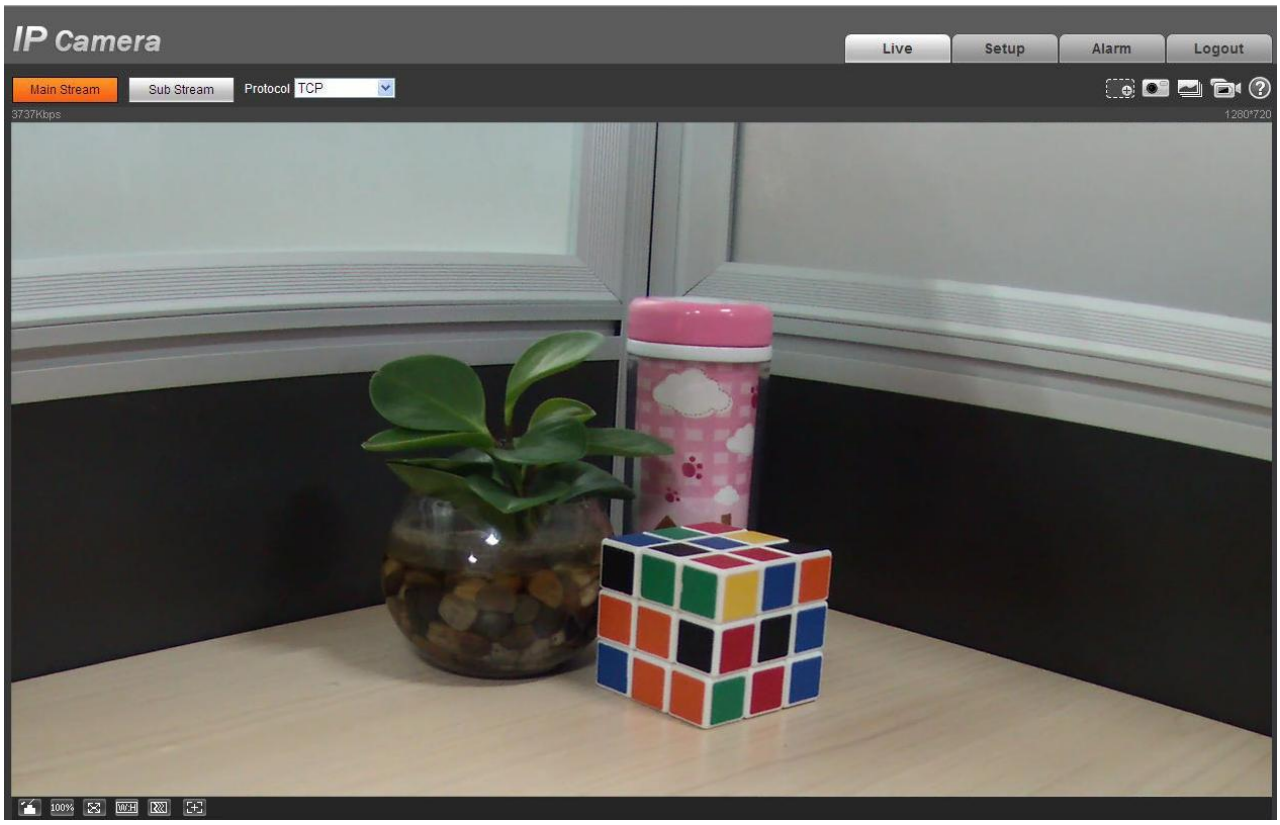


Figure 5- 3 Web monitoring window

# 6 FAQ

| Bug | |
|---|---|
| I can not boot up the device or operate properly. | Please click RESET button for at least five seconds to restore factory default setup. |
| The water leakage occurred. | ● The unauthorized front or rear cap remove many result in water leakage.<br>● The glass front cap has sustained heavy push or strike.<br>● The waterproof plug of the rear cap becomes loosen. |
| IR video is poor. | ● Did not use the proper supplying power. The IR light can not turn on completely.<br>● The object is out of the IR distance range of current device.<br>● IR-CUT does not turn to the night mode. The photosensitive chip of the front-end can not sense the IR light. |
| I can not upgrade the device via network. | When network upgrade operation failed, you can use port 3800 to continue upgrade. |
| I can not login the client-end or the WEB. | ● For Windows OS 98 or Windows ME user, if you can not install the client-end or can not view after the installation. We recommend the win2000 sp4 OS or higher, or install the client-end of the low version.<br>● The Active X control is blocked.<br>● The display card version shall be dx8.1 or higher.<br>● Network connection error occurred.<br>● Invalid network setup.<br>● Invalid user name or password. |
| I can not play the download file. | ● There is no player.<br>● There is no DX8.1 or higher.<br>● For the MEDIA PLAYER, there shall be Div X503Bundle.exe plugin if you play the .AVI file.<br>● For Windows XP user, you need to install the plugin DivX503Bundle.exe and ffdsho-2004 1012.exe. |
| Save configuration | After you modified the important setup, please reboot the device via the software to make sure the setup has been updated to the storage medium. |
| Power adapter | ● The general power adapter can work ranging from 0℃ to 40 ℃. The device may result in unstable power supply when the temperature exceeds the working temperature.<br>● Please replace an industry-level power adapter if you are using in the harsh environments. |

# Appendix Toxic or Hazardous Materials or Elements

| Component Name | Toxic or Hazardous Materials or Elements | | | | | |
|---|---|---|---|---|---|---|
| | Pb | Hg | Cd | Cr VI | PBB | PBDE |
| Circuit Board Component | ○ | ○ | ○ | ○ | ○ | ○ |
| Device Case | ○ | ○ | ○ | ○ | ○ | ○ |
| Wire and Cable | ○ | ○ | ○ | ○ | ○ | ○ |
| Packing Components | ○ | ○ | ○ | ○ | ○ | ○ |
| Accessories | ○ | ○ | ○ | ○ | ○ | ○ |

O: Indicates that the concentration of the hazardous substance in all homogeneous materials in the parts is below the relevant threshold of the SJ/T11363-2006 standard.

X: Indicates that the concentration of the hazardous substance of at least one of all homogeneous materials in the parts is above the relevant threshold of the SJ/T11363-2006 standard. During the environmental-friendly use period (EFUP) period, the toxic or hazardous substance or elements contained in products will not leak or mutate so that the use of these (substances or elements) will not result in any severe environmental pollution, any bodily injury or damage to any assets. The consumer is not authorized to process such kind of substances or elements, please return to the corresponding local authorities to process according to your local government statutes.

**Note**

- **This user's manual is for reference only. Slight difference may be found in user interface.**
- **All the designs and software here are subject to change without prior written notice.**
- **All trademarks and registered trademarks mentioned are the properties of their respective owners.**
- **If there is any uncertainty or controversy, please refer to the final explanation of us.**
- **Please visit our website for more information.**