FEATURES

- 1/3 INCH SONY SUPER HAD CCD II
- High Resolution (600 TVL) / High Sensitivity
- 0.1Lux at F1.2 (Color) / 0.01Lux (B/W)
- OSD Controlled / Day & Night / 2DNR
- HLC / Motion / Privacy / Easy Installation / 3Axis
- DC Auto IRIS V/F Lens 2.8~12mm
- DC Auto IRIS & TDN V/F Lens 2.8~12mm

SPECIFICATION

MODEL	NTSC	PAL
Resolution	600 TV Line	
Sensor	1/3 INCH SONY SUPER HAD CCD II	
Total Pixels	811(H) x 508(V) 410K pixels	795(H) x 595(V) 470K pixels
Effective Pixels	768(H) x 494(V) 380K pixels	752(H) x 582(V) 440K pixels
Scanning System	2:1 Interlace	
S/N (Y signal)	More than 50 dB (AGC Off)	
Frequency	Horizontal: 15.734KHz / Vertical: 59.94Hz	Horizontal: 15.625KHz / Vertical: 50.00Hz
Video Output	CVBS: 1.0Vp-p / 75ohm	
Min.Illumination	0.1Lux at F1.2 (Color) / 0.01Lux (B/W)	
White Balance	ATW1 / ATW2 / AWC→SET / MANUAL Adjustable	
Electronic shutter speed	AUTO / MANUAL (1/60sec ~ 1/100,000sec)	AUTO / MANUAL (1/50sec ~ 1/100,000sec)
O.S.D	Built-in	
Backlight Compensation	OFF / BLC / HLC Selectable	
AGC (Auto Gain Control)	LOW, MIDDLE, HIGH, OFF Selectable	
2DNR (2D Digital Noise Reduction)	ON / OFF	
Day & Night	AUTO / COLOR / BW / EXT	
Privacy	OFF / ON (8 Zone)	
Motion Detection	OFF / ON (Motion size : 28 x 15, 4 AREA)	
Image Conversion	ON / OFF	
SHARPNESS	ADJUSTABLE	
Operating Temperature/ Humidity	-10'C ~ +50'C / 30% ~ 80% RH	
Storage Temperature/ Humidity	-20'C ~ +60'C / 20% ~ 90% RH	
Power	DC12V [AC24V / DC12V DualPower (option)]	

▶ Above specifications may be changed without any notice.

CCTV DOME CAMERA

DIMENSION

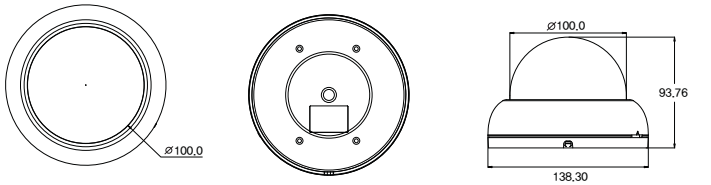

INSTALLATION

1. Opening
   Use the coin to open the cover.

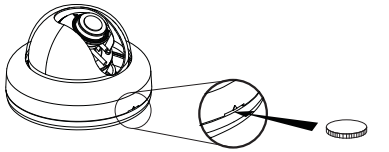

2. Place the camera in the desired location and install using the screws supplied.

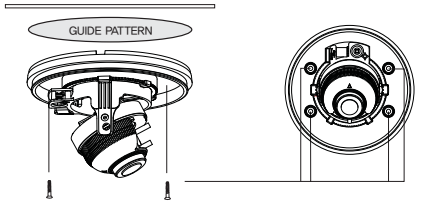

3. Connecting Cables

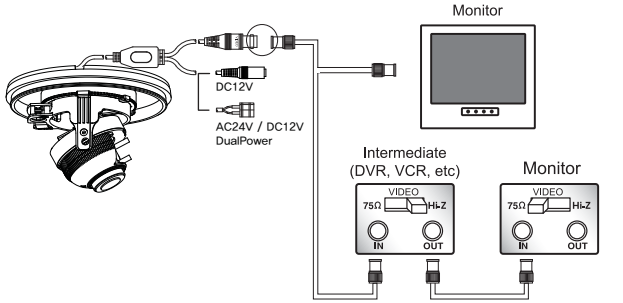

4. Pan / Tilt (3Axis) Controls

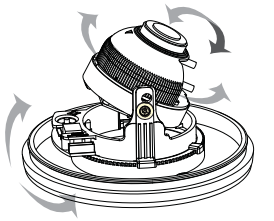
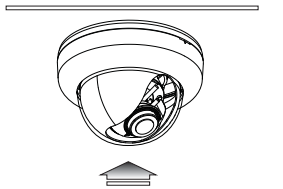
5. Closing the cover